Officially Released to the LBNL Document Control Center
Released: April 7th, 1997 DCC Auth Key:
Downloaded by: James H Thomas at August 12, 2014 13:22:55

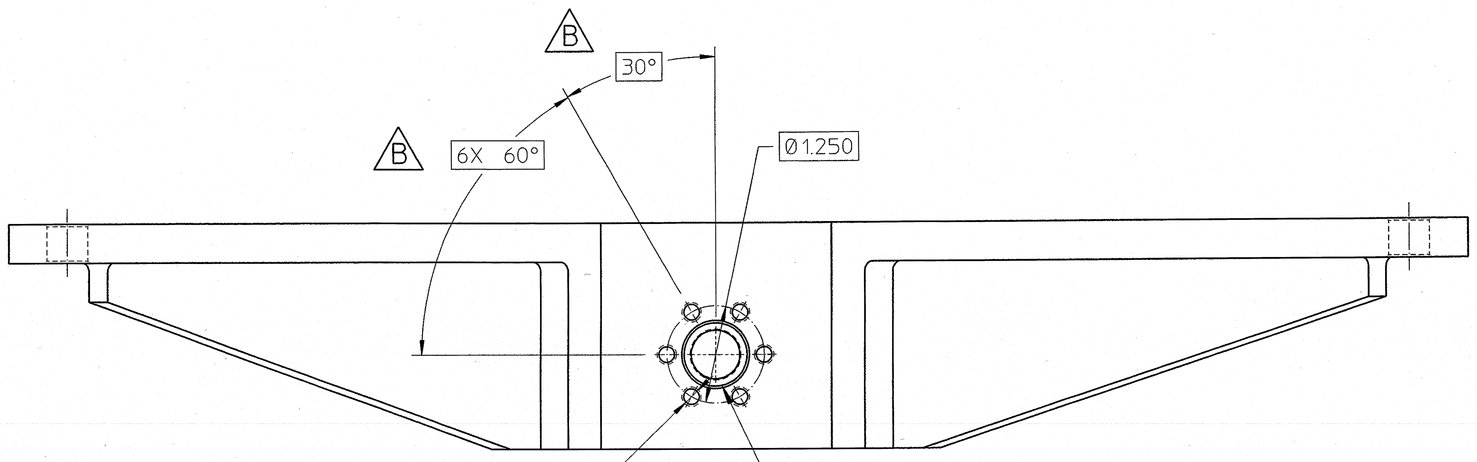

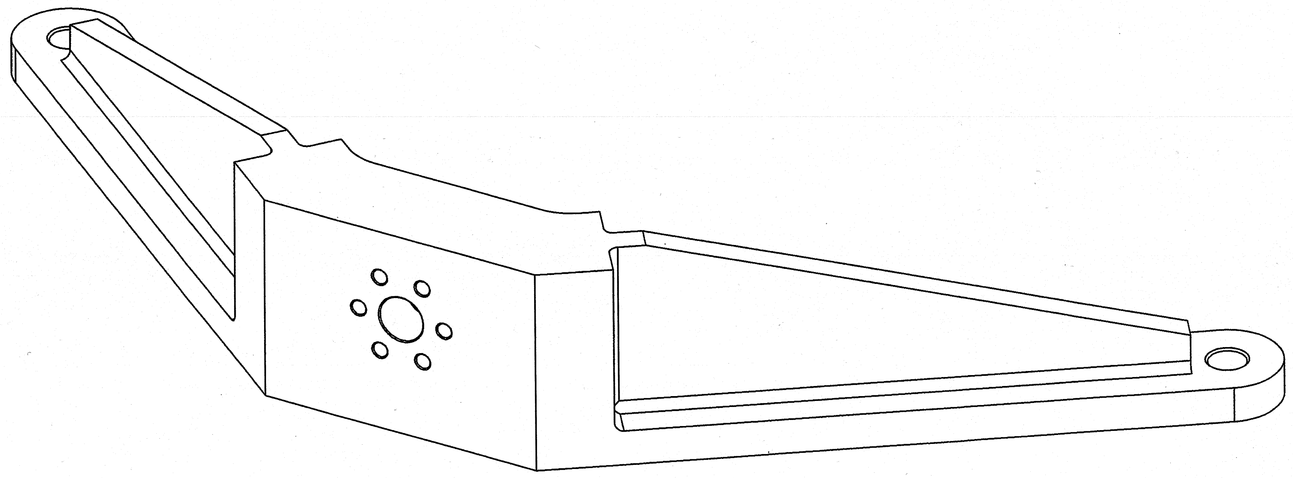

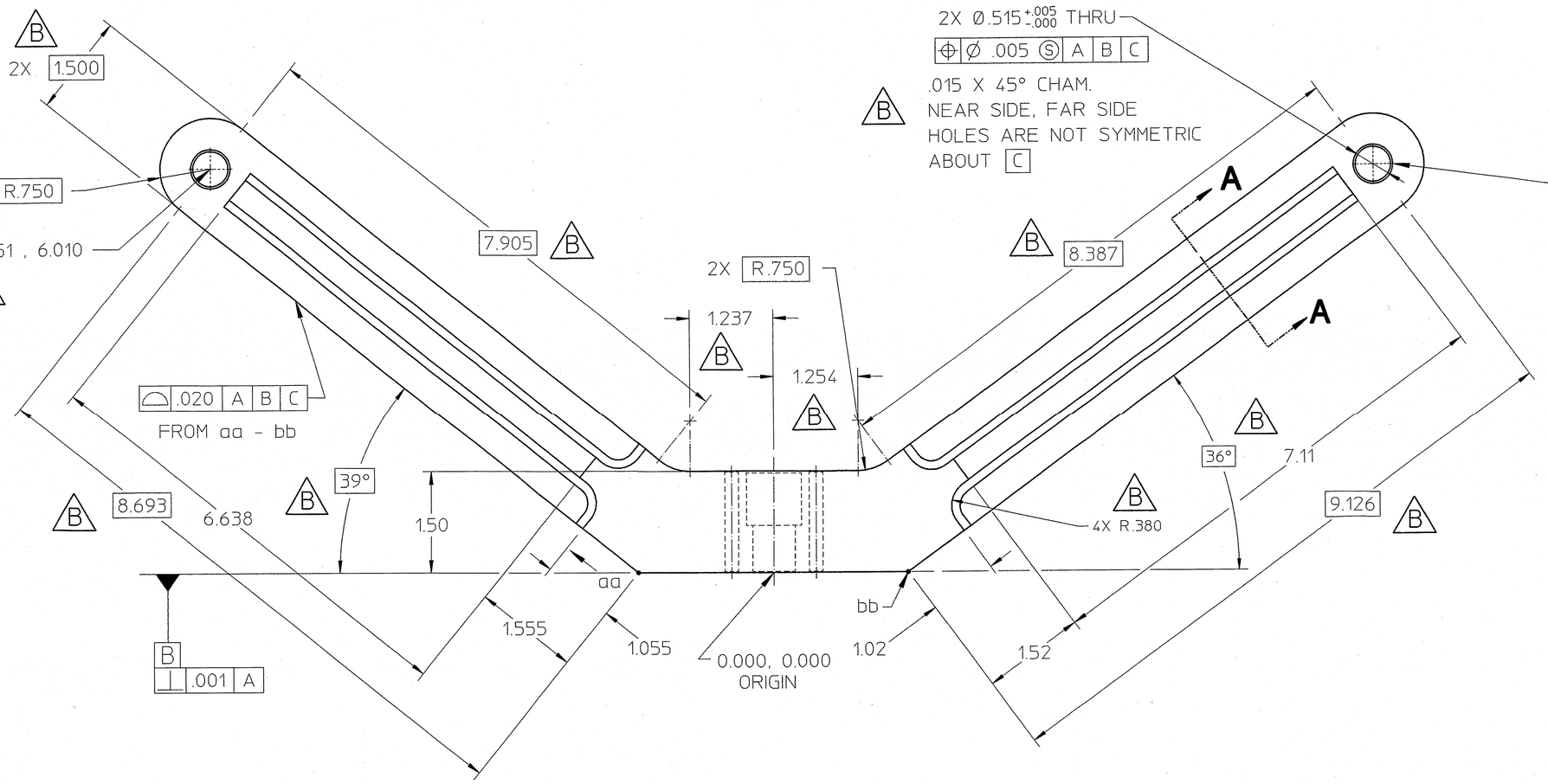

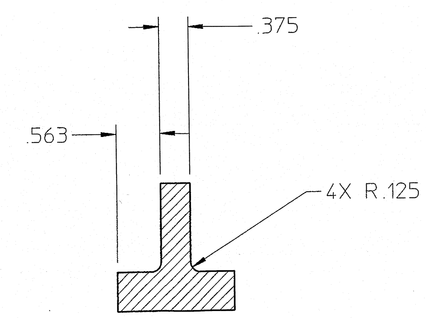

SECTION **A–A**

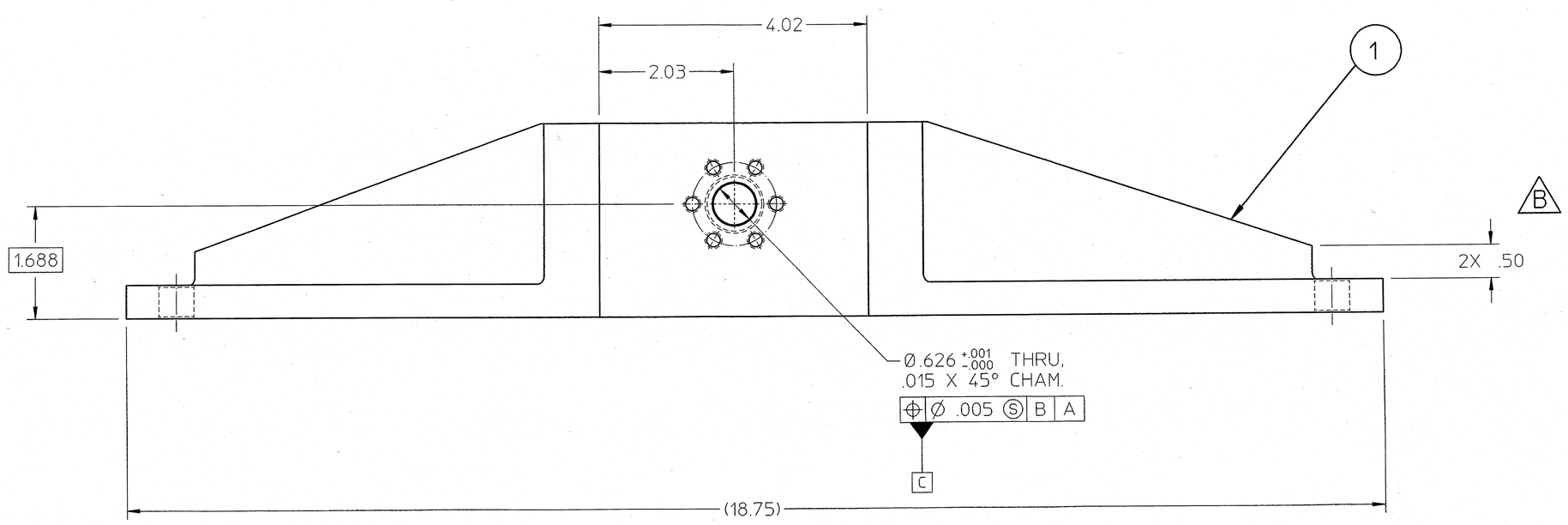

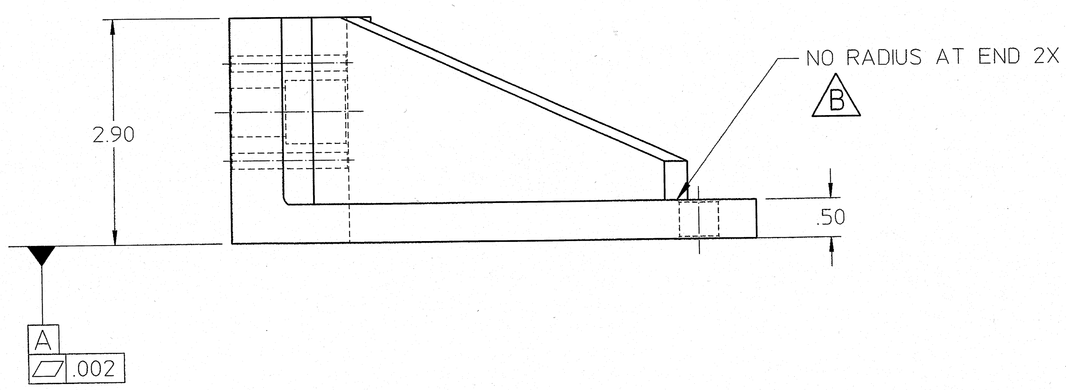

24A9846B

NOTES:
1. X, Y DIMENSIONS FOR Ø.515 HOLES ARE BASIC AND ARE TO BE USED FOR LOCATING THE HOLES.
2. TOOLING BALL HOLES TO AID FEATURE POSITIONING MAY BE USED SEE ENGINEERING GROUP.
3. LEG ANGLES ARE NOT SYMETRIC ABOUT ORIGIN.

REV	DWN	CHK	ZONE	DATE	CHANGES
B	JO	GK		5/15/97	MAJOR REVISION
A	JO	GK		4/7/97	RELEASED FOR FABRICATION

SHOP ORDERS
ACCT. NO.:
DATE ISSD.: DATE REQD.: SER. NO.: NO. REQ'D.
SURFACE TREATMENT: DEGREASE
IDENTIFICATION METHOD: TAG

APPROVALS
DRWN BY: J.ORTIZ DATE: 4/7/97
CHECK BY: G.KOEHLER DATE: 4/7/97
PRODUCTION APPROVAL: DATE
COORDINATE ENGINEER: R.WELLS DATE: 4/7/97

ITEM	REQ	PART NUMBER	DESCRIPTION
1	1	24A9846A	ALUMINUM PLATE, 6061-T6, 3" THK.

STAR — WBS # 4.2.10 — DWG SIZE E — STAR DRAWING NUMBER TPC780-E-1 — REV. B — RHIC DRAWING NUMBER — REV. -

UNLESS OTHERWISE SPECIFIED
ALL DIMENSIONS ARE INCHES
TOLERANCES: X" = ±.06" ; XX" = ± .010" ; XXX" = ± .005" ; ANGLES ± 1°
FINISH 125
SAWED, FLAMECUT, SHEARED OR STOCK FINISH
ALL SCREW THREADS PER ANSI Y14.6
BREAK EDGES .020/.05 MAX ON MACHINE WORK.
REMOVE BURRS, LOOSE SCALE AND WELD SPATTER
REFERENCE - ANSI Y14.5 & B46.1

LAWRENCE BERKELEY LABORATORY
UNIVERSITY OF CALIFORNIA - BERKELEY
RHIC - STAR - TPC
TPC ASSEMBLE & TEST
SMT OS SPIDER DOUBLE LEG

PATENT CLEAR: PC — DRAWING TYPE: DETAIL — SHOWN ON — SCALE: FULL — DO NOT SCALE FROM THIS DWG.
DESIGN ACCOUNT: 8052-30 — CATEGORY CODE: SR-02-10 — LBL DRAWING NUMBER: 24A9846 — B