Officially Released to the LBNL Document Control Center
Released: June 17th, 1996 DCC Auth Key: PHW47JKN21
Downloaded by: James H Thomas at August 12, 2014 12:53:08

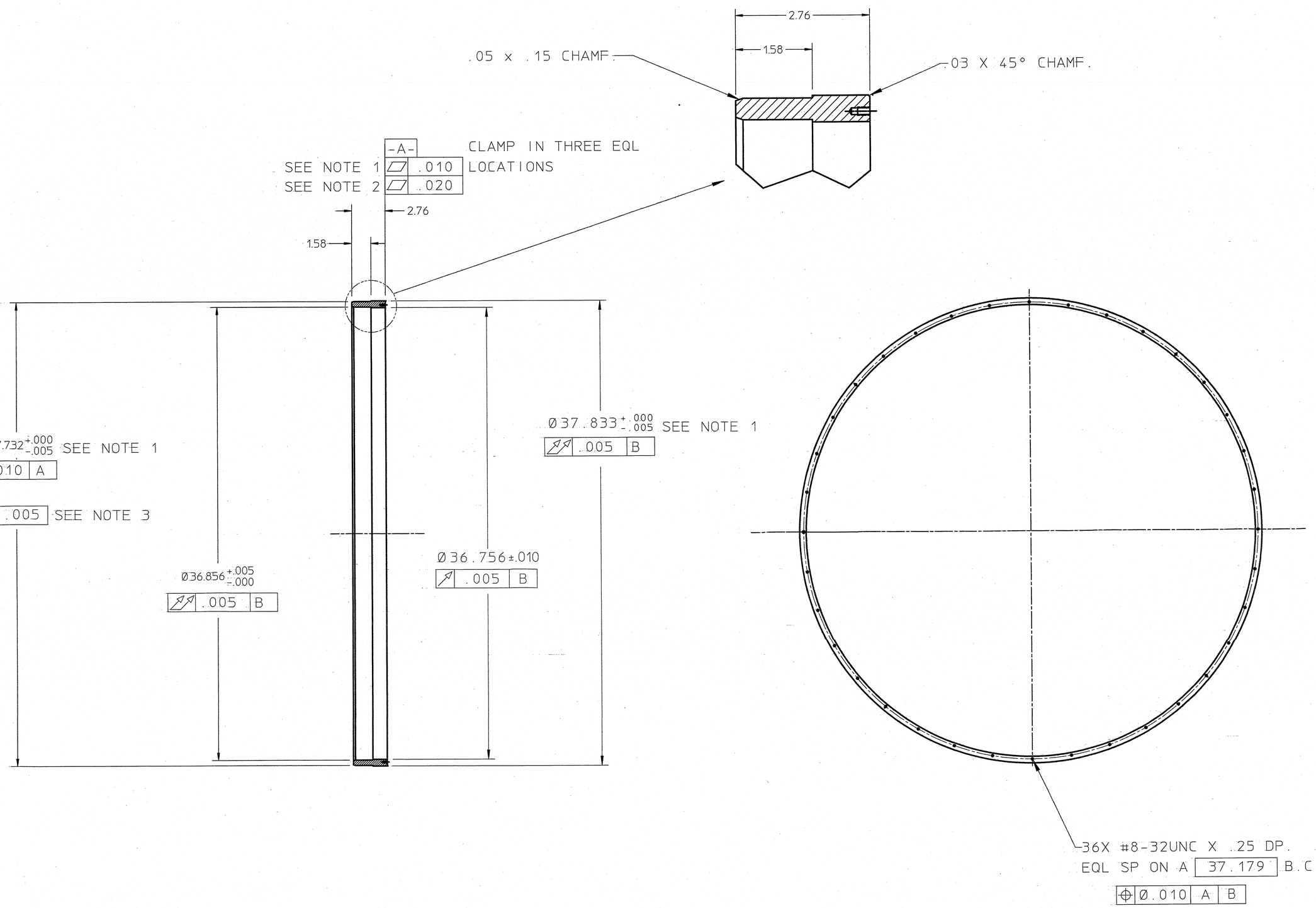

NOTES,

1. DIMENSIONS APPLY UNDER FULLY RESTRAINED CONDITIONS, AND 68°F.
2. PART TO BE FLAT (DATUM A) WITHIN 0.020 IN THE FREE STATE.
3. PART IS RESTRAINED RADIALLY AT TWO POINTS.

REV.	DWN.	CHK.	ZONE	DATE	CHANGES
A	AR			06/17/96	RELEASED FOR FABRICATION

SHOP ORDERS
ACCT. NO.: SER. NO.:
DATE REQ'D: 00/00 NO. REQ'D: -
SURFACE TREATMENT: DEGREASE
IDENTIFICATION METHOD: TAG

APPROVALS
DRAWN BY: A.RAWLINS DATE: 06/17/96
CHECK BY: DATE
PRODUCTION APPROVAL: DATE
COGNIZANT ENGINEER: DATE

MAKE FROM 24A9086

ITEM	REQ	PART NUMBER	DESCRIPTION

STAR | WBS # 4.2.3 | DWG SIZE E | STAR DRAWING NUMBER TPC279-E-1 | REV. A | RHIC DRAWING NUMBER | REV.

UNLESS OTHERWISE SPECIFIED
ALL DIMENSIONS ARE INCHES
TOLERANCES: .X = ±.06 ANGLES ±.5° .XX = ± .02 FINISH .XXX = ± .005 125
SAWED, FLAMECUT, SHEARED OR STOCK FINISH
ALL SCREW THREADS PER ANSI Y14.6
BREAK EDGES .020 MAX ON MACHINE WORK.
REMOVE BURRS, LOOSE SCALE AND WELD SPATTER
REFERENCE - ANSI Y14.5 & B46.1

LAWRENCE BERKELEY LABORATORY
UNIVERSITY OF CALIFORNIA - BERKELEY
RHIC/STAR DETECTOR
INNER FIELD CAGE-END RINGS
FIXED INNER

PATENT CLEAR	DRAWING TYPE	SHOWN ON	SCALE: 1/4	DO NOT SCALE PRINTS
	DETAIL	00X0000		
MICROFILMED	DESIGN ACCOUNT	CATEGORY CODE	LBL DRAWING NUMBER	REV.
	8052-22	SR-02-03	24A9316	A

24A9096A