Officially Released to the LBNL Document Control Center
Released: December 5th, 1996 DCC Auth Key: 5T1EMU0GV0
Downloaded by: James H Thomas at August 12, 2014 12:53:05

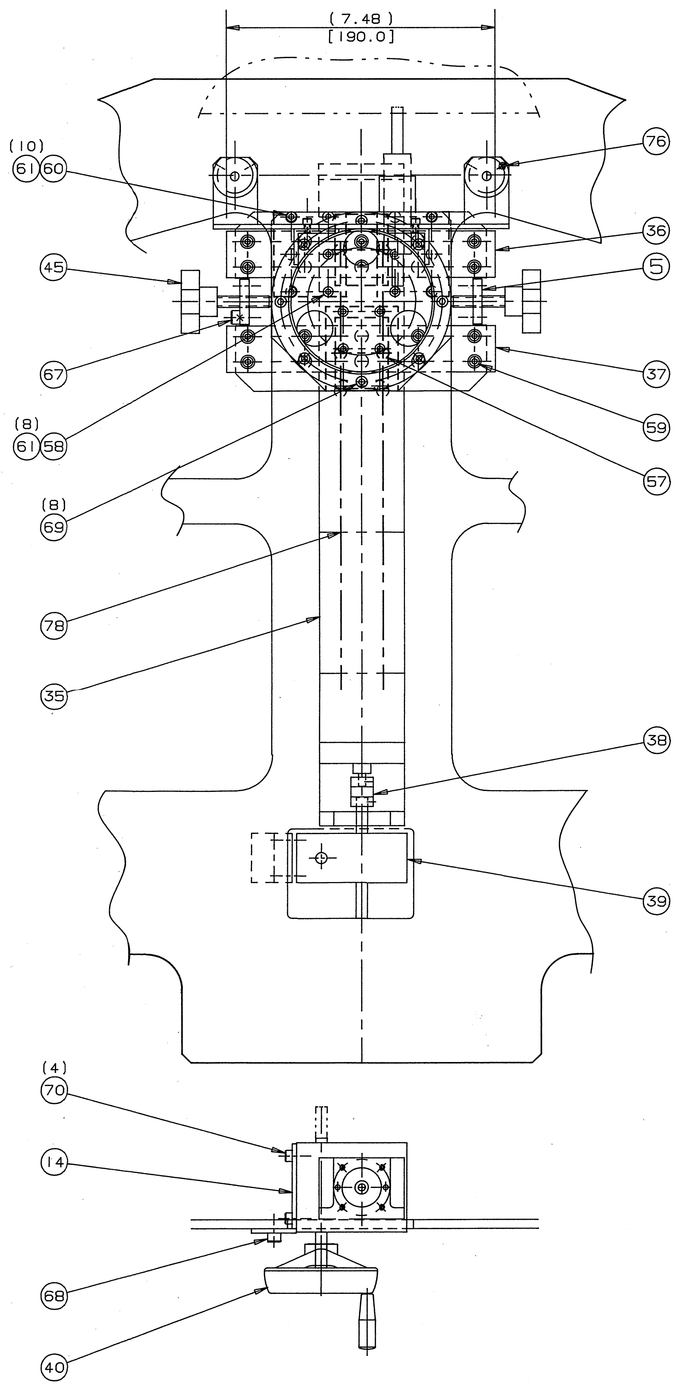

VIEW E-E

FROM SHEET #1

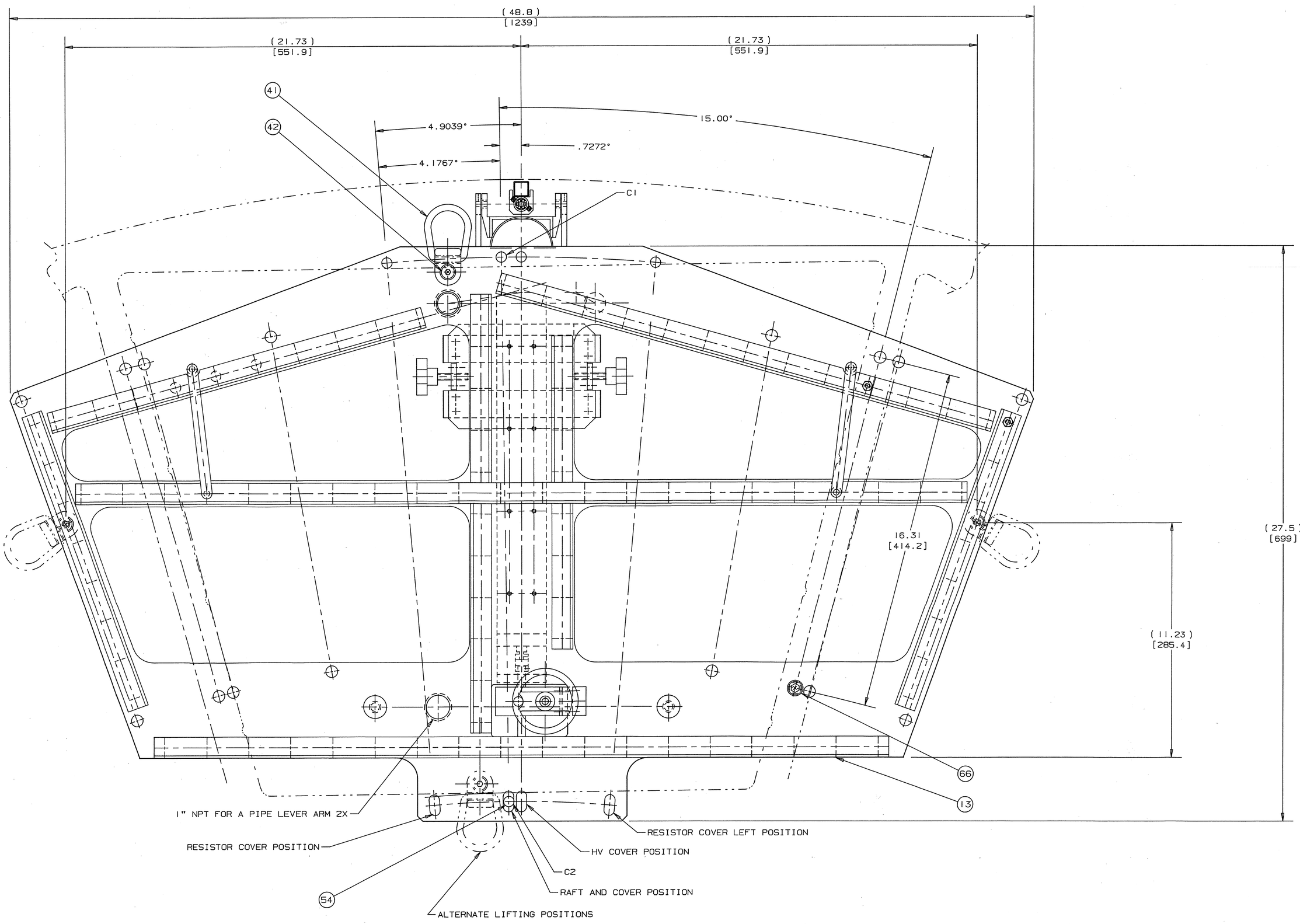

VIEW F-F

FROM SHEET #1

ASSEMBLY IS SHOWN IN RAFT INSTALLATION POSITION
WITH TPC ROTATED .7272° FROM NORMAL

24A8896B

REV.	DWN.	CHK.	ZONE	DATE	CHANGES
B	JIA		ALL	12/05/96	REVISED FOR LRFT & RIGHT RESISTOR COVER
A	JIA			10/09/96	INITIAL RELEASE

SHOP ORDERS

APPROVALS

ITEM	REQ	PART NUMBER	DESCRIPTION
			FOR ITEM DESCRIPTION REFER TO SHEET #1

STAR	WBS # 4.2.6	DWG SIZE E	STAR DRAWING NUMBER TPC -E-1	REV. A	RHIC DRAWING NUMBER REV.

UNLESS OTHERWISE SPECIFIED
ALL DIMENSIONS ARE INCHES / MILLIMETERS

.X/.X = ±.06/.15	ANGLES ±.5°	
.XX/.X = ±0.02/0.05	FINISH 125/.32	
0.XXX/.XX=±.004/.01		

SAWED, FLAMECUT, SHEARED OR STOCK FINISH
ALL SCREW THREADS PER ANSI Y14.6
BREAK EDGES .020/.05 MAX ON MACHINE WORK.
REMOVE BURRS, LOOSE SCALE AND WELD SPATTER
REFERENCE - ANSI Y14.5 & B46.1.

LAWRENCE BERKELEY LABORATORY
UNIVERSITY OF CALIFORNIA - BERKELEY
RHIC/STAR TPC
LASER SYSTEM - RAFT/COVER INSTALLATION TOOLING
ASSEMBLY, SHEET #2

PATENT	DRAWING TYPE	SHOWN ON	SCALE: HALF	DO NOT SCALE PRINT
	DETAIL			

MICROFILMED	DESIGN ACCOUNT	CATEGORY CODE	LBL DRAWING NUMBER	REV.
	8052-26	SR-02-06	24A8896	B