Officially Released to the LBNL Document Control Center
Released: July 17th, 1997 DCC Auth Key:
Downloaded by: James H Thomas at August 12, 2014 13:19:33

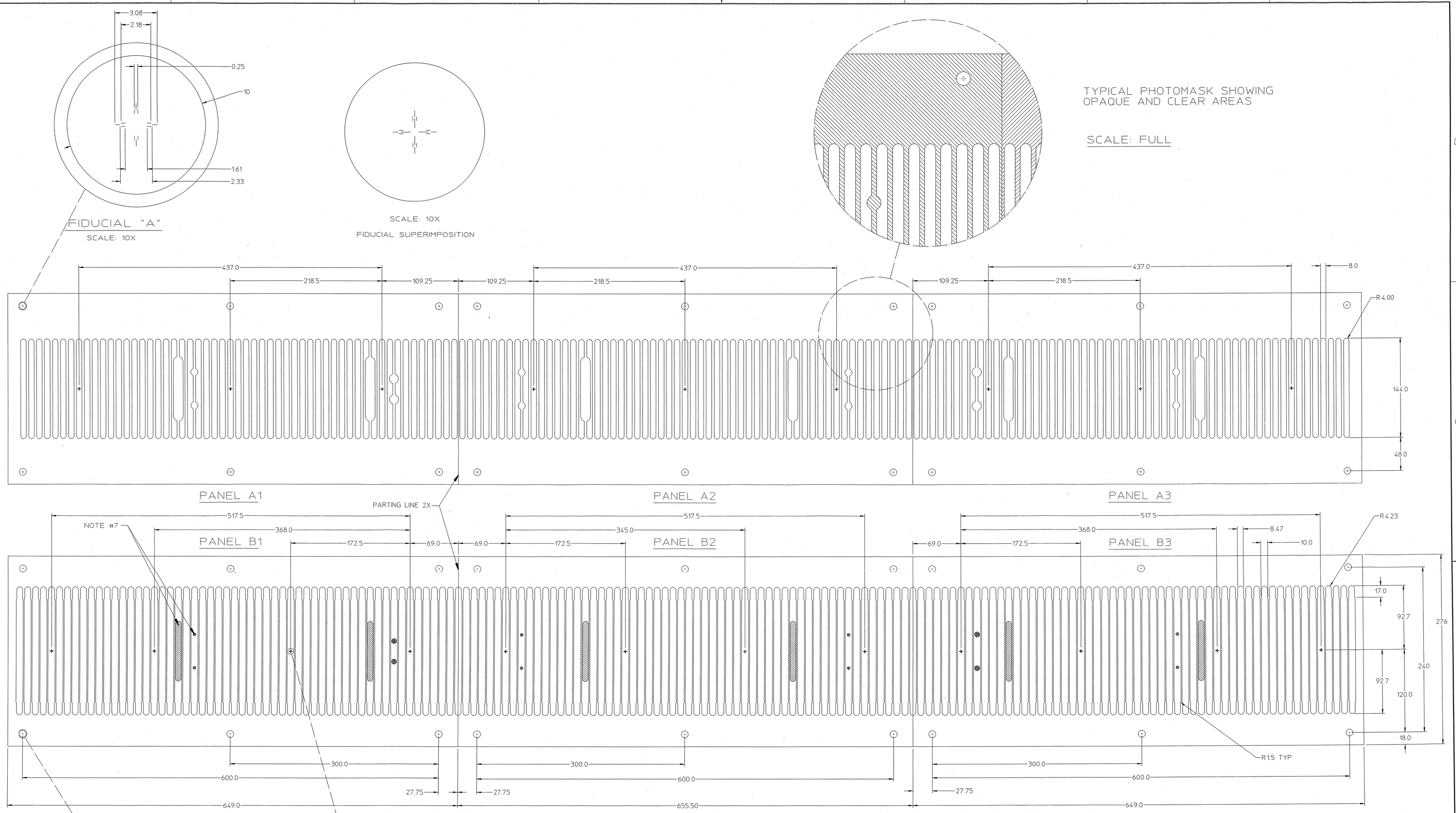

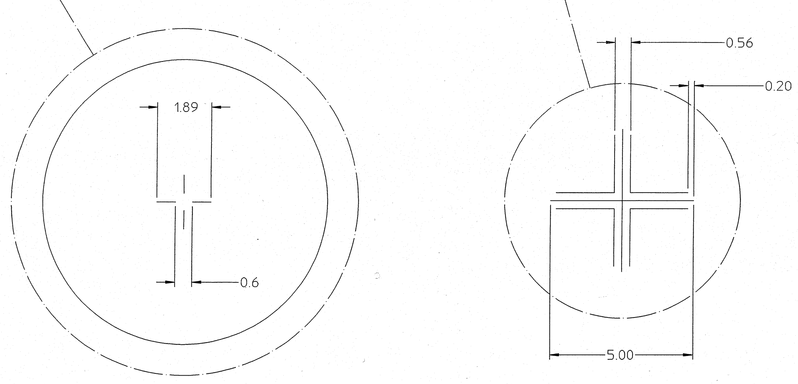

FIDUCIAL "B"
SCALE: 10X

CENTRAL FIDUCIAL
SCALE: 10X

NOTES:

1. DIMENSIONS ARE IN MM.
2. DIMENSIONAL ACCURACY REQUIREMENTS FOR THE MASK IS:
   .001" PER 10" LENGTH AS MEASURED FROM CENTER LINE OF EACH MASK.
3. THE BACKGROUND IS OPAQUE AND THE 8 MM AND 10 MM STRIPES ARE TRANSPARENT. THE AREAS AROUND EACH REGISTER TARGET ARE ALSO TRANSPARENT. SEE FULL SCALE DETAIL ABOVE.
4. MATERIAL IS .007" MYLAR OR SIMILAR FILM WITH GELATIN SILVER EMULSION (NOT DIAZO).
5. THIS DRAWING IS FOR INFORMATION ONLY. ACTUAL IGES FILES CONTAINING LINE INFORMATION ONLY ARE SREPARATE. FILE "8MMRAFTM.IGS" CONTAINS THE THREE "A" PANELS AND "10MMRAFT.IGS" CONTAINS ALL THE "B" PANELS.
6. LINE WIDTH FOR ALL LINES .05 mm (.002").
7. CIRCLES AND SLOTS WITHIN THE STRIPES ON PANELS B1, B2 AND B3 ARE OPAQUE.

REV.	DWN	CHK	ZONE	DATE	CHANGES
A	JIA			02/19/96	INITIAL RELEASE

SHOP ORDERS
ACCT. NO.: SER. NO.:
DATE ISSD: DATE REQD: NO. REQD:
SURFACE TREATMENT:
IDENTIFICATION METHOD:
APPROVALS
DRAWN BY: AHJ.II DATE 03/27/96
CHECK BY: DATE
PRODUCTION APPROVAL: DATE
COGNIZANT ENGINEER: DATE

ITEM	REQ	PART NUMBER	DESCRIPTION
STAR	WBS # 4.2.6	DWG SIZE E	STAR DRAWING NUMBER TPC -E-1

REV. | RHIC DRAWING NUMBER | REV.

UNLESS OTHERWISE SPECIFIED
ALL DIMENSIONS ARE INCHES / MILLIMETERS
SERIES: X/X = □06/.15; XX/X = □02/0.05; 0.XXX/XX-□004/.01
ANGLES □ 5□
FINISH 125/.32
SAWED, FLAMECUT, SHEARED OR STOCK FINISH
ALL SCREW THREADS PER ANSI Y14.6
BREAK EDGES .020/.05 MAX ON MACHINE WORK.
REMOVE BURRS, LOOSE SCALE AND WELD SPATTER
REFERENCE - ANSI Y14.5 & B46.1

LAWRENCE BERKELEY LABORATORY
UNIVERSITY OF CALIFORNIA - BERKELEY
RHIC/STAR TPC
LASER SYSTEM - LASER RAFT
RAFT COVER SKIN ART WORK MASK

PATENT CLEAR | DRAWING TYPE DETAIL | SHOWN ON | SCALE: NOTED | DO NOT SCALE PRINTS
MICROFILMED M-65 | DESIGN ACCOUNT 8052-26 | CATEGORY CODE SR-02-06 | LBL DRAWING NUMBER 24A8736 | REV. A

24A8736A