Officially Released to the LBNL Document Control Center
Released: June 25th, 1996 DCC Auth Key: 6DLMT2SG9R
Downloaded by: James H Thomas at August 12, 2014 12:53:03

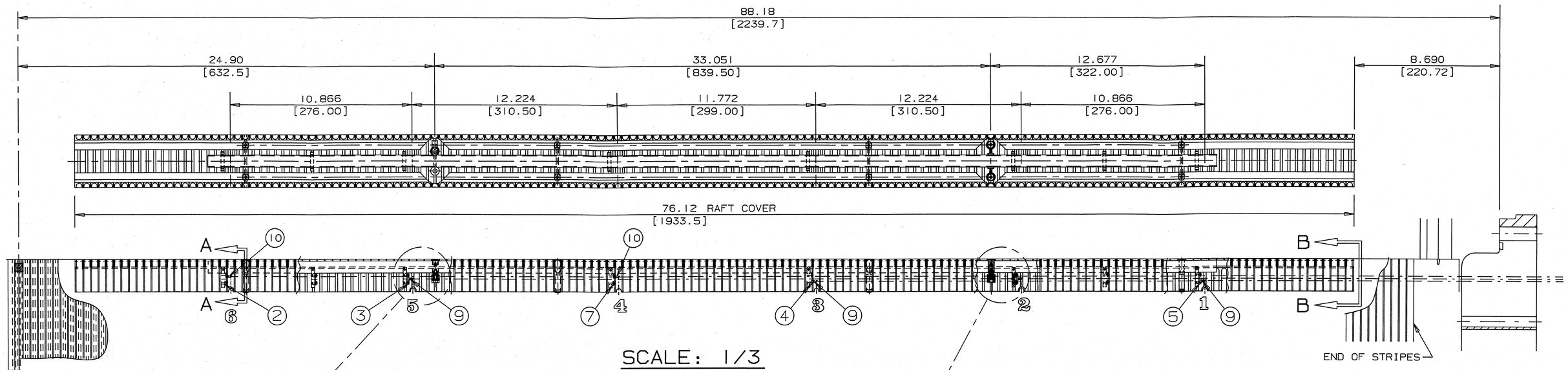


SCALE: 1/3

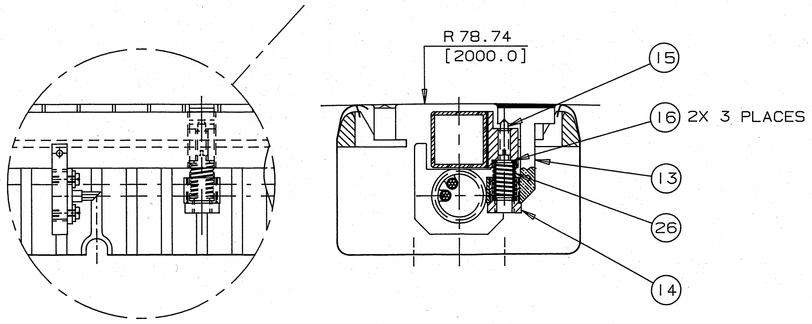


SINGLE RAFT SUPPORT

DETAIL - C

SCALE: FULL

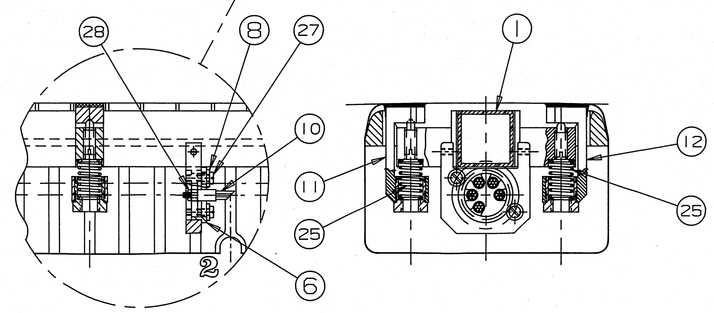

PAIRED RAFT SUPPORT

DETAIL - D

SCALE: FULL

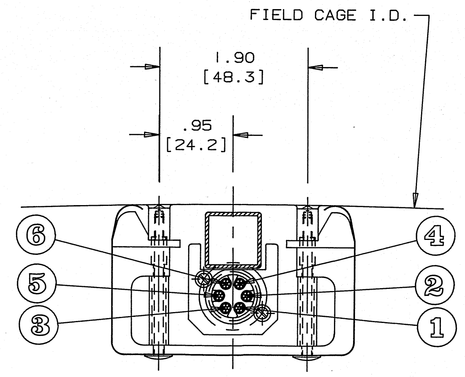


SECTION B-B

SCALE: FULL

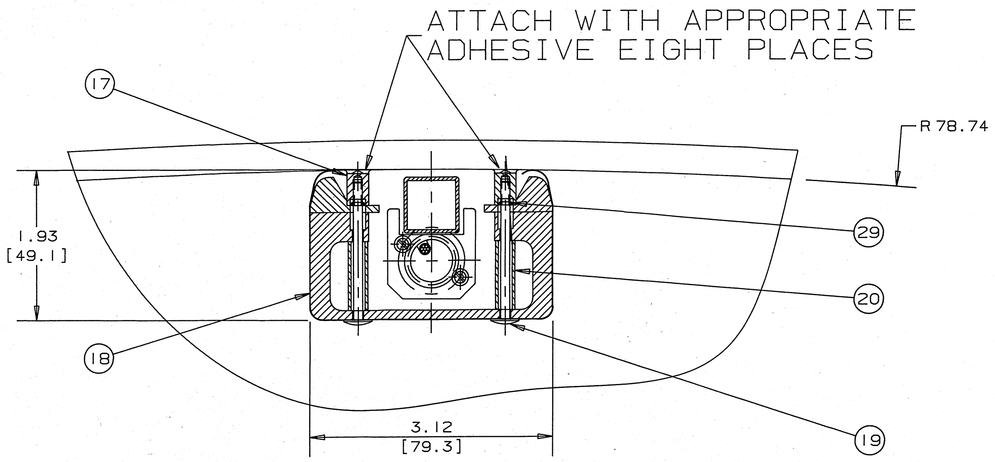


SECTION A-A

SCALE: FULL

NOTES:

1. VITON O-RINGS MUST BE BOILED IN A DEIONIZED WATER.
2. QUANTITIES OF PARTS LISTED ARE FOR ONE ASSEMBLY. THERE ARE 12 ASSEMBLIES ON THE INSTALLATION.
3. THE NUMBERS ONE THROUGH SIX IDENTIFY THE MIRROR BUNDLE LOCATIONS ON THE RAFT.
4. ITEM #21 (2 EA) AND ITEM #27 (4 EXTRA) ARE ONLY REQUIRED DURING THE ALIGNMENT OF THE RAFT.

| ITEM | REQ | PART NUMBER | DESCRIPTION |
|---|---|---|---|
| 29 | 8 | | O-RING 1/16 I.D. X 1/32 C.S. MINNESOTA RUBBER #8103, VITON (NOTE#1) |
| 28 | 6 | | HEXAGON NUT M1.6-0.35 BRASS |
| 27 | 16 | | CHEESE HD MACHINE SCREW M2-0.4 X 8MM LONG BRASS |
| 26 | 1 | 711-27-95-5 | ASSOCIATED SPRING COMPRESSION SPRING, 15.8 #/IN, .75 F.L., .300 O.D. Ø.040 WIRE, 9.3 COILS, SQ & GRND, PHOSPHOR BRONZE |
| 25 | 2 | 711-27-95-4 | ASSOCIATED SPRING COMPRESSION SPRING, 6.8 #/IN, .75 F.L., .300 O.D. Ø.032 WIRE, 8.2 COILS, SQ & GRND, PHOSPHOR BRONZE |
| 24 | | | |
| 23 | | | |
| 22 | | | |
| 21 | REF | 24A8882 | RAFT ALIGNMENT RETICLE (TWO REQUIRED FOR ALIGNMENT) |
| 20 | 8 | 24A8812 | RESISTOR COVER SCREW SLEEVE |
| 19 | 8 | 24A8802 | RESISTOR COVER MOUNTING SCREW |
| 18 | 1 | 24A8596 | RAFT COVER |
| 17 | 8 | 24A8572 | RAFT COVER MOUNTING TAB |
| 16 | 6 | 24A8532 | RAFT SPRING WASHER |
| 15 | 3 | 24A8512 | RAFT ADJUSTMENT SCREW |
| 14 | 3 | 24A8512 | RAFT SUPPORT INSERT |
| 13 | 1 | 24A8492 | SINGLE SUPPORT BASE |
| 12 | 1 | 24A8482 | PAIRED SUPPORT SLIDING BASE |
| 11 | 1 | 24A8472 | PAIRED SUPPORT FIXED BASE |
| 10 | 3 | 24A8462-2 | MIRROR BUNDLE HOLDER TYPE II (POSITIONS 2,4 & 6) |
| 9 | 3 | 24A8462-1 | MIRROR BUNDLE HOLDER TYPE I (POSITIONS 1,3 & 5) |
| 8 | 12 | 24A8542 | RETAINING BUTTON |
| 7 | 1 | 24A8442-6 | BUNDLE HOLDER INSERT (POSITION #4) |
| 6 | 1 | 24A8442-5 | BUNDLE HOLDER INSERT (POSITION #2) |
| 5 | 1 | 24A8442-4 | BUNDLE HOLDER INSERT (POSITION #1) |
| 4 | 1 | 24A8442-3 | BUNDLE HOLDER INSERT (POSITION #3) |
| 3 | 1 | 24A8442-2 | BUNDLE HOLDER INSERT (POSITION #5) |
| 2 | 1 | 24A8442-1 | BUNDLE HOLDER INSERT (POSITION #6) |
| 1 | 1 | 24A8404 | RAFT FRAME ASSEMBLY |

24A8506A

| REV. | DWN. | CHK. | ZONE | DATE | CHANGES |
|---|---|---|---|---|---|
| A | JIA | | | 06/26/96 | INITIAL RELEASE |

SHOP ORDERS

| | | | |
|---|---|---|---|
| ACCT. NO.: | | SER. NO.: | |
| DATE (SCR): | DATE REC'D: | NO. REQ'D: | |
| SURFACE TREATMENT: | | | |
| IDENTIFICATION METHOD: | TAG | | |

APPROVALS

| | | DATE |
|---|---|---|
| DRWN | Al-Li.J.I. | 06/25/96 |
| CHECK | | DATE |
| PROJECT ENGINEER | | DATE |
| PRODUCTION APPROVAL | | DATE |
| CONSULTANT ENGINEER | | DATE |

| | | | |
|---|---|---|---|
| WBS # | 4.2.6 | DWG SIZE | E |
| STAR DRAWING NUMBER | TPC538-E-1 | REV. | A |
| RHIC DRAWING NUMBER | | REV. | |

UNLESS OTHERWISE SPECIFIED

ALL DIMENSIONS ARE INCHES / MILIMETERS

| | | |
|---|---|---|
| DIM TOL | .X/.X = ±.06/.15 | ANGLES ±.5° |
| | .XX/.X = ±0.02/0.05 | FINISH |
| | 0.XXX/.XX=±.004/.01 | 125/.32 |

SHARP, FLANGED, SMOOTHED OR STOCK FINISH
ALL SCREW THREADS PER ANSI Y14.6
BREAK EDGES .020/.05 MAX ON MACHINE WORK.
REMOVE BURRS, LOOSE SCALE AND WELD SPATTER
REFERENCE - ANSI Y14.5 & B46.1.

LAWRENCE BERKELEY LABORATORY
UNIVERSITY OF CALIFORNIA - BERKELEY

RHIC/STAR TPC
LASER SYSTEM - LASER RAFT
RAFT ASSEMBLY

| | | | |
|---|---|---|---|
| PATENT CLEAR | DRAWING TYPE: DETAIL | SHOWN ON | SCALE: NOTED |
| MODIFIED PLANS | DESIGN ACCOUNT: 8052-26 | CATEGORY CODE: SR-02-06 | LBL DRAWING NUMBER: 24A8506 |

DO NOT SCALE DRAWING — REV.: A