Officially Released to the LBNL Document Control Center
Released: July 31st, 1994 DCC Auth Key: FU8TUOMEZM
Downloaded by: James H Thomas at August 12, 2014 12:52:59

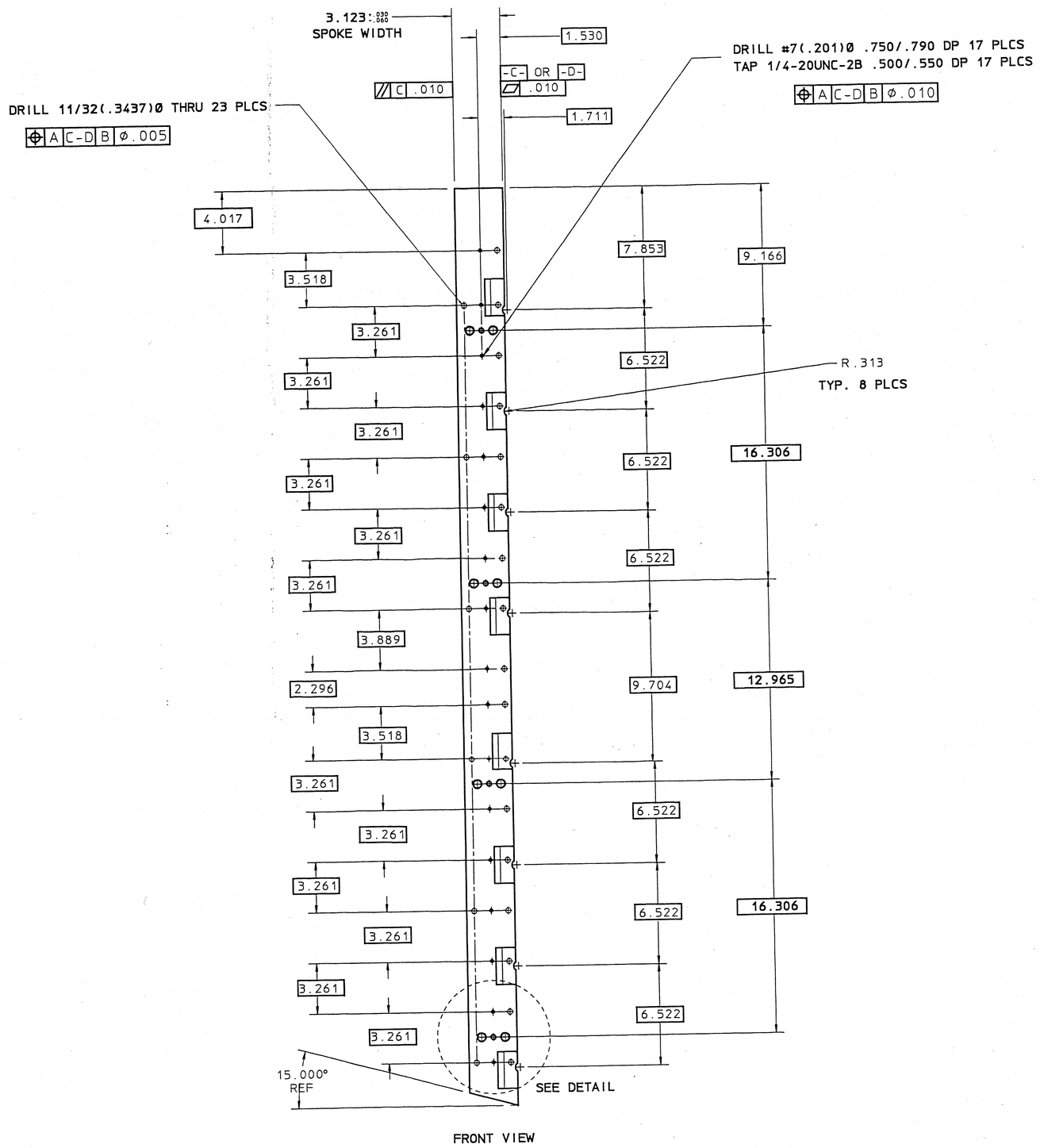

FRONT VIEW

SPOKE FINISH MACHINING DETAIL

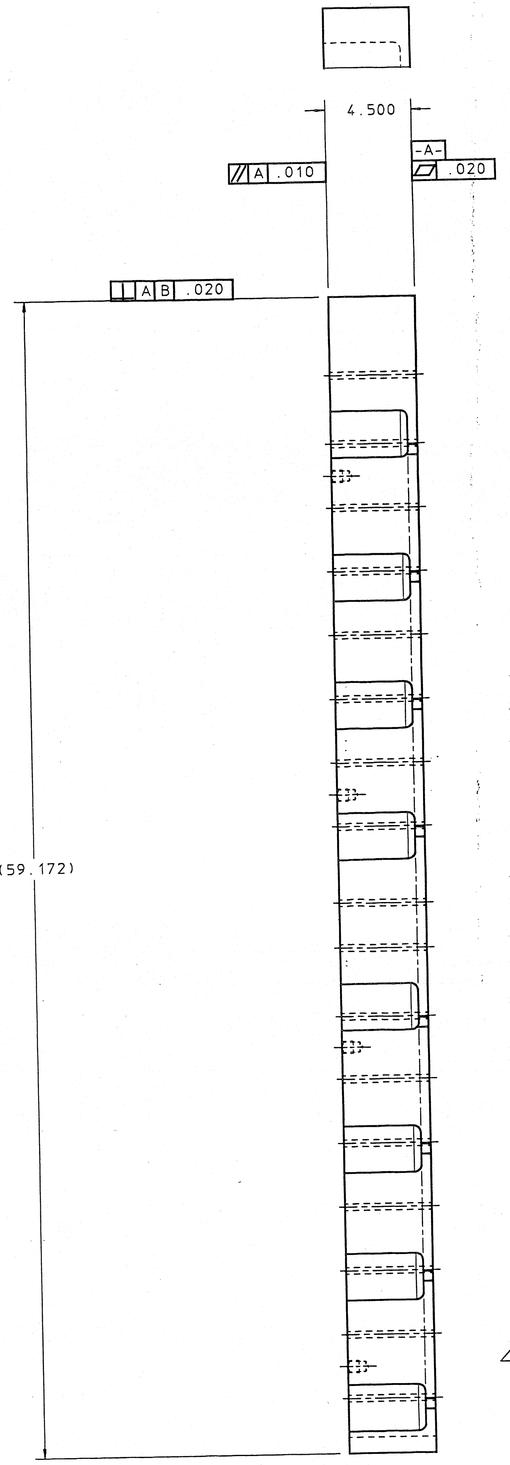

SIDE VIEW

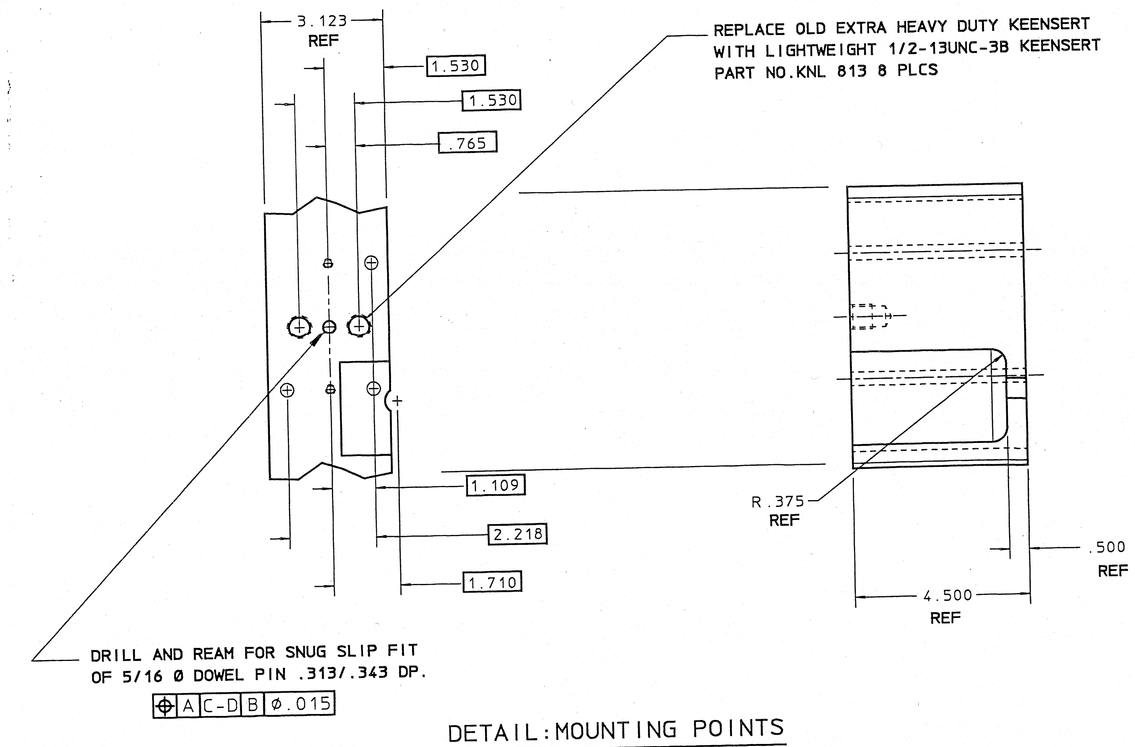

DETAIL: MOUNTING POINTS

SCALE: FULL

TYP. 4 PLCS

24A5056E

Notes:
1. There are right and left spokes which are mirror images of each other.
2. Machine features after Wheel Mockup structure is welded.

REV	DWG	CHK	ZONE	DATE	CHANGES
E	AWR			7-27-95	CHANGED INSERTS TO 1/2-13UNC-3B
D	RCW			5-13-94	CHANGED TO REFLECT AS BUILT.
C	RCW		B3 D7	5-02-94	CHANGED DIM 3.060 TO 3.123 ADDED DIM 1.530 AND CALLOUT FOR 5/16 DOWEL PIN HOLES. CHANGED 4.170 TO 4.07 AND 6.022 TO 6.522 AND ADDED DIM 7.853 & 3.261
B	RCW		C7	4-21-94	CHANGED DIM 59.155 TO 59.172 AND DIM 9.149 TO 9.166 AND CORRECTED DIM 8.032 TO 4.170.

UNLESS OTHERWISE SPECIFIED
TOLERANCES: .X ± .06 FRAC. ± ; .XX ± .015 ANGLES ± 1° ; .XXX ± .005 FINISH 125
THREADS ARE CLASS 2.
CHAMFER ENDS OF ALL SCREW THREADS 30°, CUT 1.5 PITCH THRD RELIEF WITH ROUND NOSE TOOL ON MACHINE CUT THREADS.
BREAK EDGES .016 MAX. ON MACHINED WORK.
REMOVE BURRS WELD SPLATTER & LOOSE SCALE
REFERENCES: ANSI Y14.5 & B46.1.

REQD	ITEM	PART NO.	DESCRIPTION
1	1	24A5126A	WHEEL MOCKUP WELDMENT

SHOP ORDERS: ACCT. NO. / SERIAL NO. / DATE ISSD / DATE REQD. / NO REQD. / DELIVER TO

SURFACE TREATMENT: DEGREASE
IDENT. METH.: TAG
DWG. BY: RC WEIDENBACH DATE 04-18-94
CHK. BY: R. WELLS DATE 7-31-95

LAWRENCE BERKELEY LABORATORY
UNIVERSITY OF CALIFORNIA-BERKELEY

RHIC-STAR TPC
WHEEL MOCKUP
MOCKUP FINISH MACHINING

PATENT CLEAR	DWG. TYPE	SHOWN ON	SCALE 1/2	DO NOT SCALE PRINTS
MICROFILMED M 8/95	CD	24A5046	DWG. NO. 24A5056 SHT 1	SIZE E REV.
	DESIGN ACCT. NO. 8052-25	CATEGORY CODE SR0205		

Officially Released to the LBNL Document Control Center
Released: July 31st, 1994 DCC Auth Key: FU8TUOMEZM
Downloaded by: James H Thomas at August 12, 2014 12:52:59

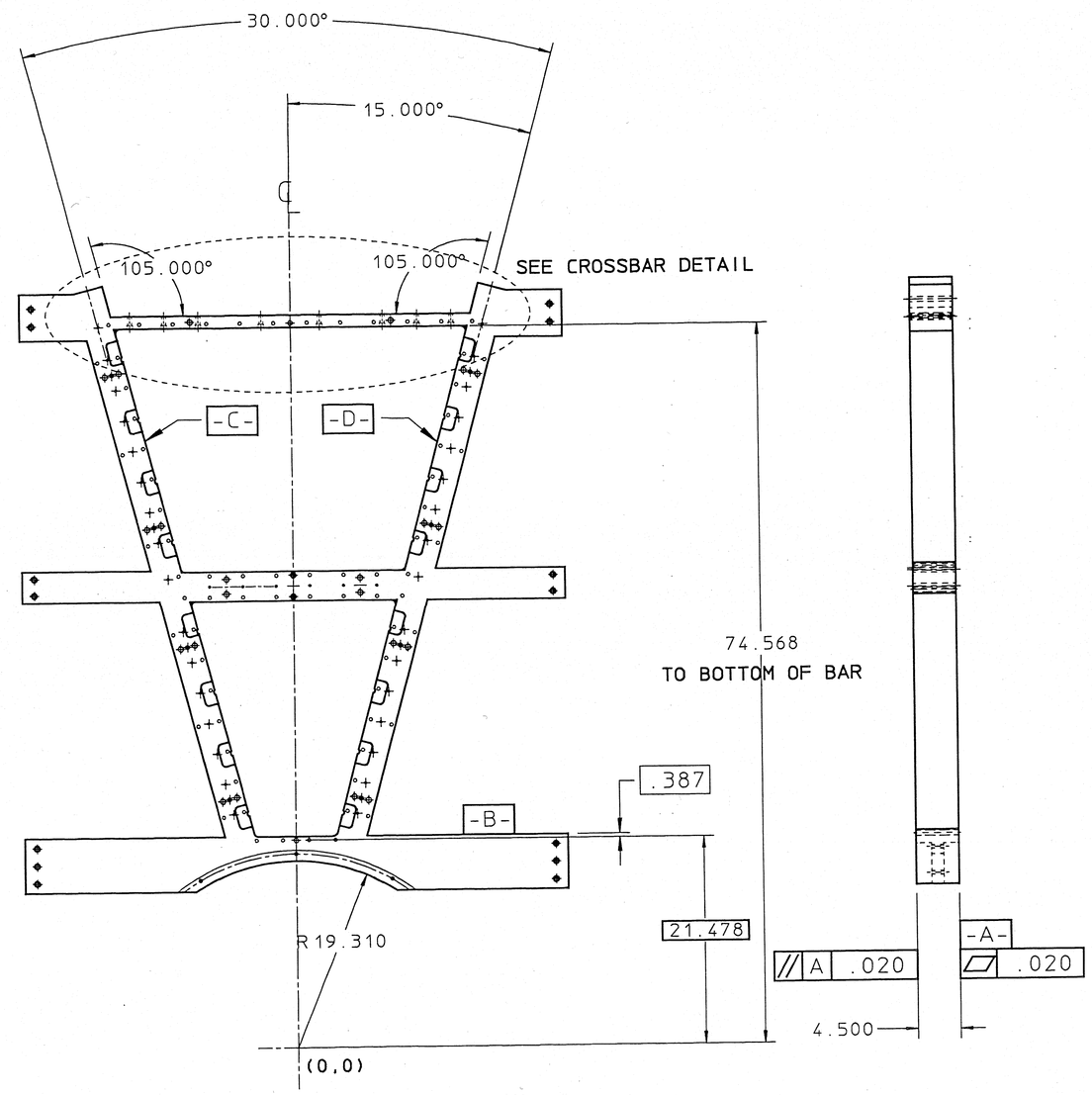

SECTOR MOCKUP

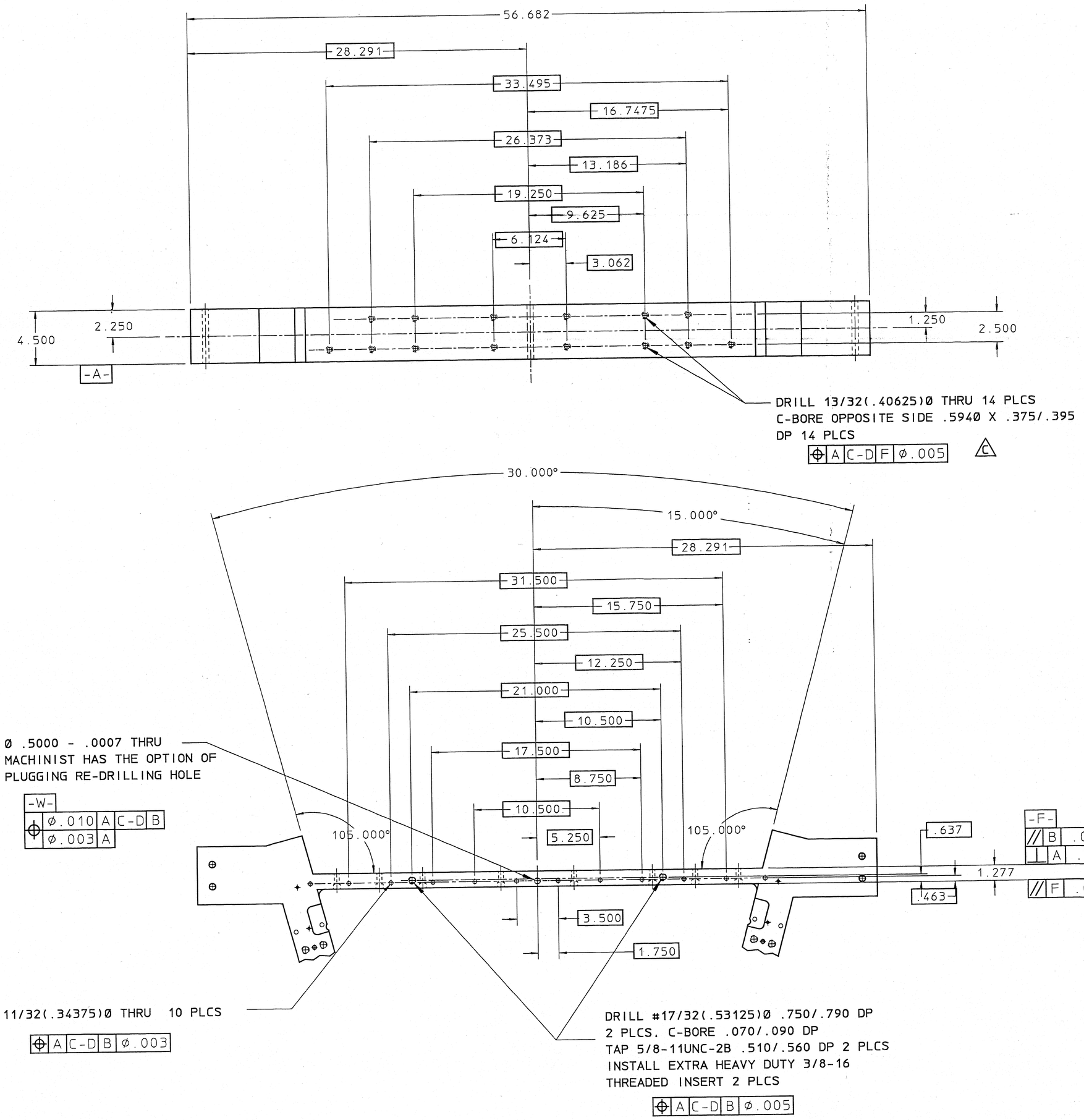

OUTER CROSSBAR DETAIL

SCALE: 1/4

REV	DWG	CHK	ZONE	DATE	CHANGES
E	AWR		BS	7-28-95	Ø .5000 WAS Ø .5312 ONE SIDE
					Ø .5000 ON THE OTHER SIDE
					CHANGED PICTORIAL TO REFLECT
					AS BUILT CONDITION.
C	RCW		B3 C1	5-02-94	CHANGED 3/8 Ø THRU HOLES TO 13/32 14
					PLCS AND ADDED .594 Ø C-BORE 14 PLCS.
					DOUBLED MOST DIMENSIONS IN OUTER
					CROSS BAR DETAIL
B	RCW		C7	4-21-94	DELETED DIM 9.623 CHANGED
					NEARLY ALL OTHER DIM

UNLESS OTHERWISE SPECIFIED
TOLERANCES: .X ± .1 FRAC. ±~ ; .XX ± .06 ANGLES ± 1° ; .XXX ± .015 FINISH 125√
THREADS ARE CLASS 2
CHAMFER ENDS OF ALL SCREW THREADS 30°. CUT 1.5 PITCH THRD RELIEF WITH ROUND NOSE TOOL ON MACHINE CUT THREADS.
BREAK EDGES .016 MAX. ON MACHINED WORK. REMOVE BURRS WELD SPLATTER & LOOSE SCALE
REFERENCES: ANSI Y14.5 & B46.1.

SHOP ORDERS: ACCT. NO. / SERIAL NO. / DATE ISSD / DATE REQD / NO. REQD / DELIVER TO
SURFACE TREATMENT: DEGREASE
IDENT. METH.: TAG
DWG. BY: RC WEIDENBACH DATE 04-07-94
CHK. BY / DATE

REQD	ITEM	PART NO.	DESCRIPTION
1	1	24A5126A	WHEEL MOCKUP WELDMENT

LAWRENCE BERKELEY LABORATORY
UNIVERSITY OF CALIFORNIA-BERKELEY
RHIC-STAR TPC
WHEEL MOCKUP
MOCKUP FINAL MACHINING

PATENT CLEAR | DWG. TYPE CD | SHOWN ON 24A5046 | SCALE 1/8 | DO NOT SCALE PRINTS
MICROFILMED M 8/95 | DESIGN ACCT. NO. 8052-25 | CATEGORY CODE SR0205 | DWG. NO. 24A5056 SHT.3 | SIZE E | REV.

Officially Released to the LBNL Document Control Center
Released: July 31st, 1994 DCC Auth Key: FU8TUOMEZM
Downloaded by: James H Thomas at August 12, 2014 12:52:59

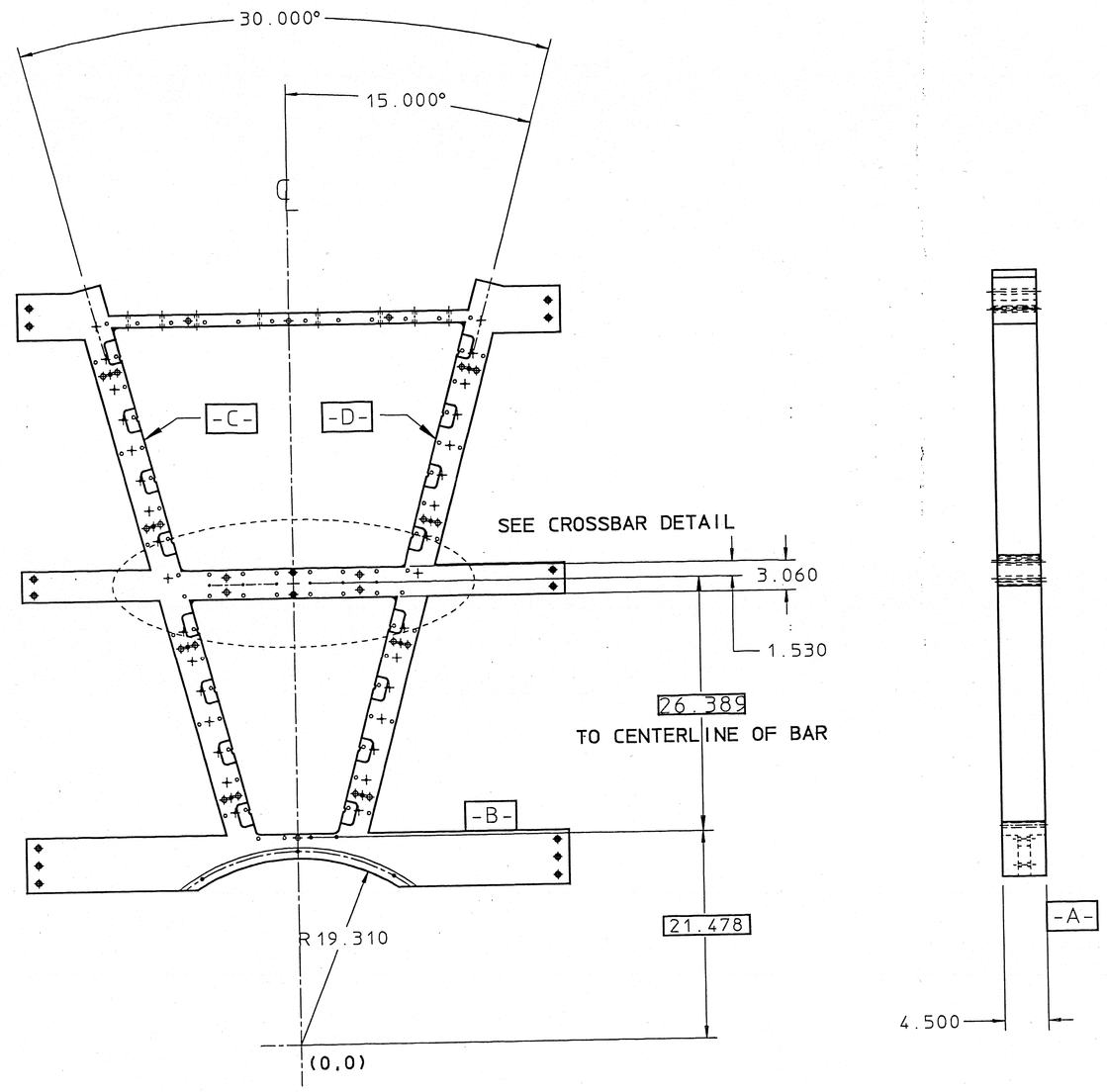

SECTOR MOCKUP

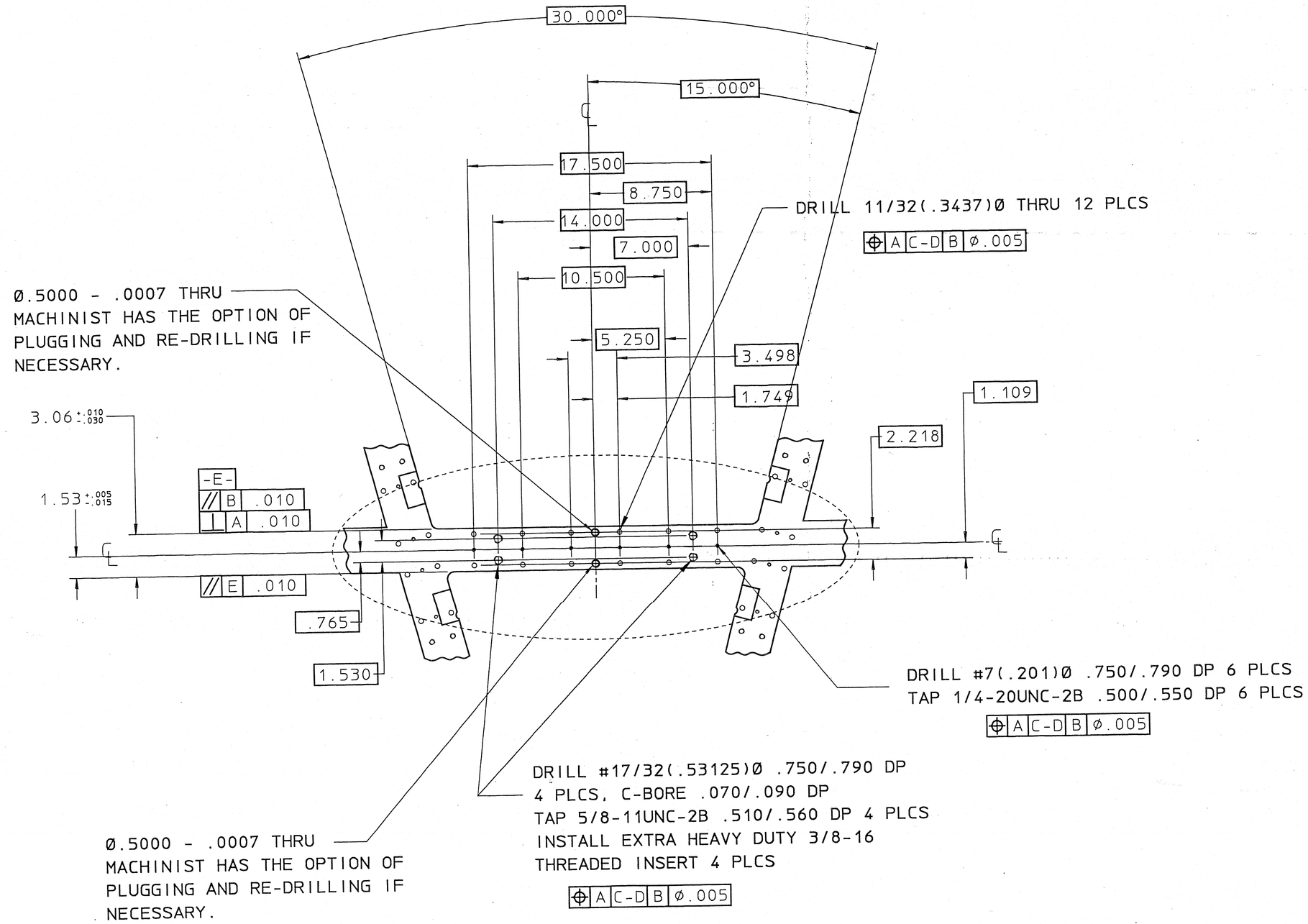

MEDIAL CROSSBAR DETAIL

SCALE: 1/4

24A5056E

REV	DWG	CHK	ZONE	DATE	CHANGES
E	AWR		B3	7-27-95	0.5000 WAS 0.5312 ON MEDIAL BAR
D	RCW		D3	5-13-94	CHANGED PICTORIAL TO REFLECT AS BUILT CONDITION.
C	RCW		D3	4-26-94	CLARIFIED CALLOUT FOR BUSHED HOLE.

REQD	ITEM	PART NO.	DESCRIPTION
1	1	24A5126A	WHEEL MOCKUP WELDMENT

UNLESS OTHERWISE SPECIFIED
TOLERANCES: .X ± .1 FRAC. ± ; .XX ± .06 ANGLES ± 1° ; .XXX ± .015 FINISH 125
THREADS ARE CLASS 2
CHAMFER ENDS OF ALL SCREW THREADS 30°, CUT 1.5 PITCH TWO RELIEF WITH ROUND NOSE TOOL ON MACHINE CUT THREADS.
BREAK EDGES .016 MAX. ON MACHINED WORK. REMOVE BURRS WELD SPLATTER & LOOSE SCALE
REFERENCES: ANSI Y14.5 & B46.1.

SHOP ORDERS: ACCT. NO. / SERIAL NO. / DATE ISSD / DATE REQD. / NO. REQD. / DELIVER TO
SURFACE TREATMENT: DEGREASE
IDENT. METH.: TAG
DWG. BY: RC WEIDENBACH DATE: 04-18-94
CHK. BY / DATE

LAWRENCE BERKELEY LABORATORY
UNIVERSITY OF CALIFORNIA-BERKELEY
RHIC-STAR TPC
WHEEL MOCKUP
MOCKUP FINAL MACHINING

PATENT CLEAR	DWG. TYPE	SHOWN ON	SCALE	DO NOT SCALE PRINTS
	CD	24A5046	1/8	
MICROFILMED	DESIGN ACCT. NO.	CATEGORY CODE	DWG. NO.	SIZE / REV.
M 8/95	8052-25	SR0205	24A5056 SHT.2	E

Officially Released to the LBNL Document Control Center
Released: July 31st, 1994 DCC Auth Key: FU8TUOMEZM
Downloaded by: James H Thomas at August 12, 2014 12:52:59

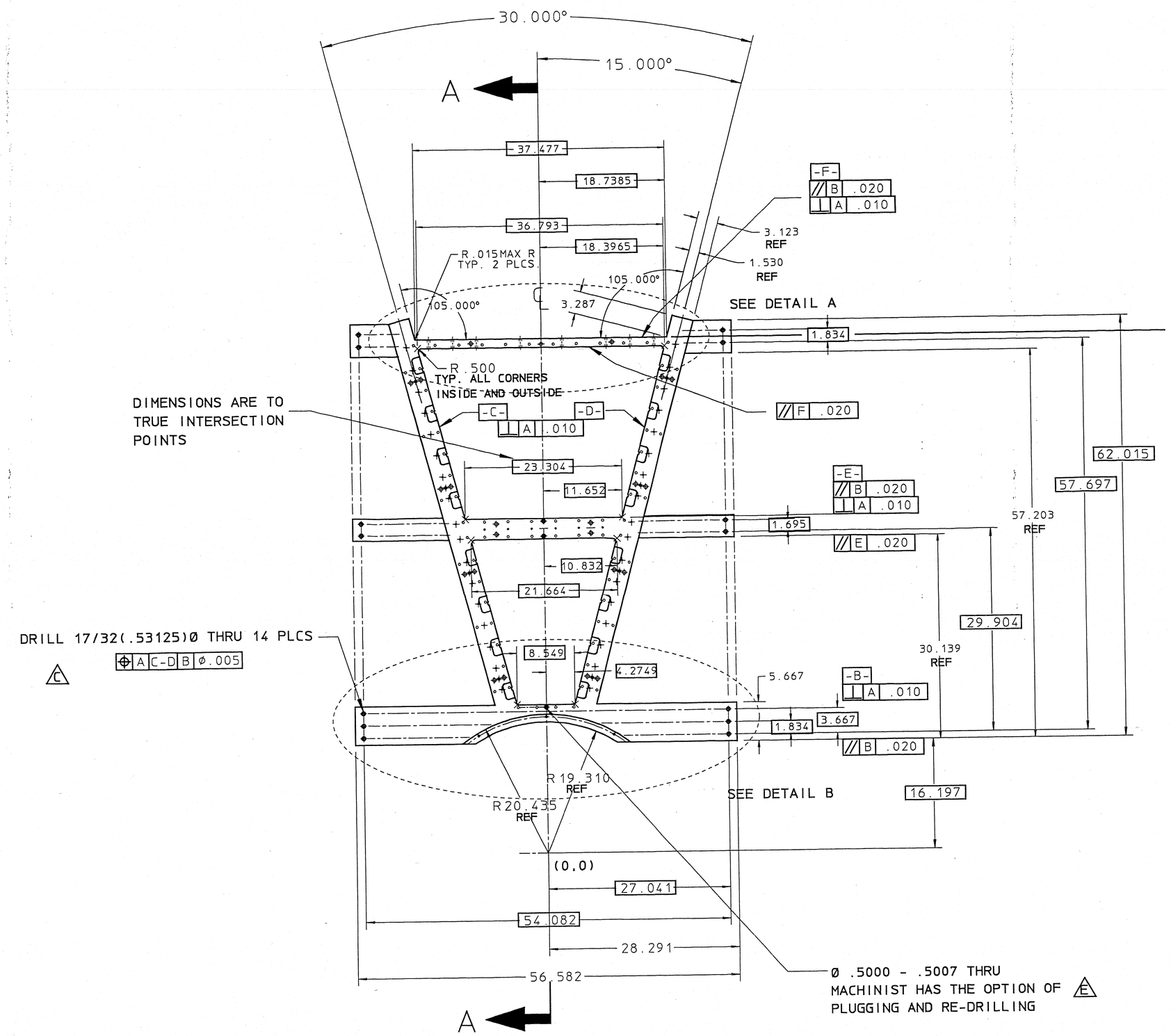

SECTOR MOCKUP

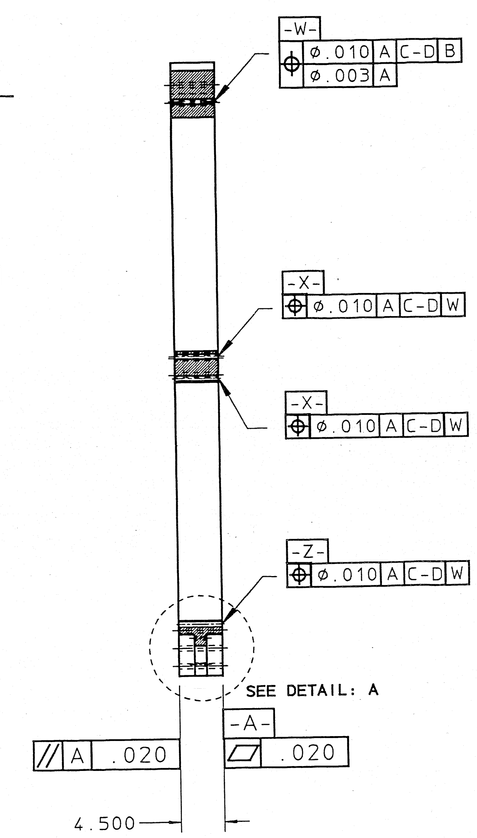

SECTION A-A

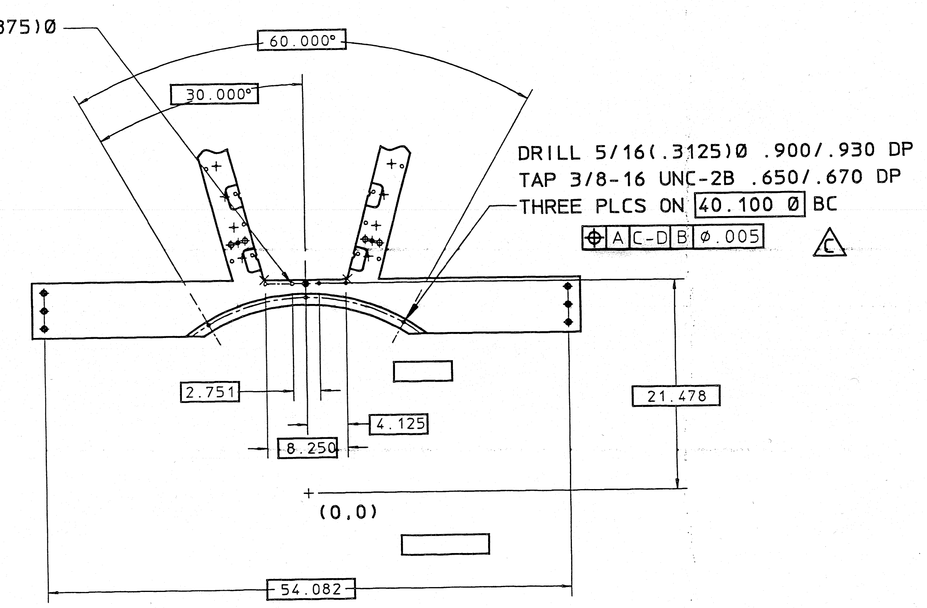

DETAIL: B

SCALE: 1/8

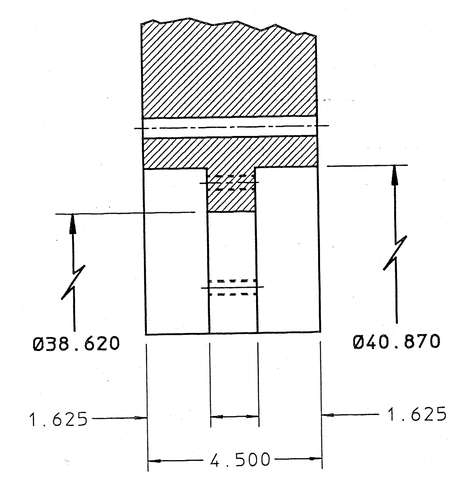

DETAIL: A

SCALE: 1/2

24A5056E

REV	DWG	CHK	ZONE	DATE	CHANGES
E	AWR		C3	7-28-94	Ø .5000 WAS Ø .5312 ON ONE SIDE AND Ø .5000 ON THE OTHER
D	RCW		C3 C2	5-12-94	CHANGED SECTION A-A AND DETAIL A TO REFLECT AS BUILT CONDITION.
C	RCW		B3 D1	5-6-94	CLARIFIED CALLOUT FOR BUSHED HOLE AND ADDED CALLOUT FOR 3/8-16 TAPPED HOLES 9 PLCS. CHANGED 17/32 HOLE QTY. TO 14
B	RCW		D8	4-21-94	ADDED DIM 3.287 TO CLARIFY HOLE RELATIONS ADDED DETAIL B

UNLESS OTHERWISE SPECIFIED
TOLERANCES: .X ± .1 FRAC. ± ; .XX ± .06 ANGLES ± 1° ; .XXX ± .015 FINISH 125√
THREADS ARE CLASS 2
CHAMFER ENDS OF ALL SCREW THREADS 30°, CUT 1.5 PITCH END RELIEF WITH ROUND NOSE TOOL ON MACHINE CUT THREADS.
BREAK EDGES .016 MAX. ON MACHINED WORK
REMOVE BURRS WELD SPLATTER & LOOSE SCALE
REFERENCES: ANSI Y14.5 & B46.1.

SHOP ORDERS
ACCT. NO. | SERIAL NO. | DATE ISSD. | DATE REQD. | NO. REQD.
DELIVER TO
SURFACE TREATMENT DEGREASE
IDENT. METH. TAG
DWG. BY RC WEIDENBACH DATE DEC-18-94
CHK. BY DATE

REQD	ITEM	PART NO.	DESCRIPTION
1	1	24A5126A	WHEEL MOCKUP WELDMENT

LAWRENCE BERKELEY LABORATORY
UNIVERSITY OF CALIFORNIA-BERKELEY
RHIC-STAR TPC
WHEEL MOCKUP
MOCKUP FINAL MACHINING

PATENT CLEAR	DWG. TYPE	SHOWN ON	SCALE	DO NOT SCALE PRINTS
	CD	24A5046	1/8	

MICROFILMED	DESIGN ACCT. NO.	CATEGORY CODE	DWG. NO.	SIZE	REV.
M 8/95	8052-25	SR0205	24A5056 SHT. 4		E