REQ	ITEM	PART NUMBER	DESCRIPTION

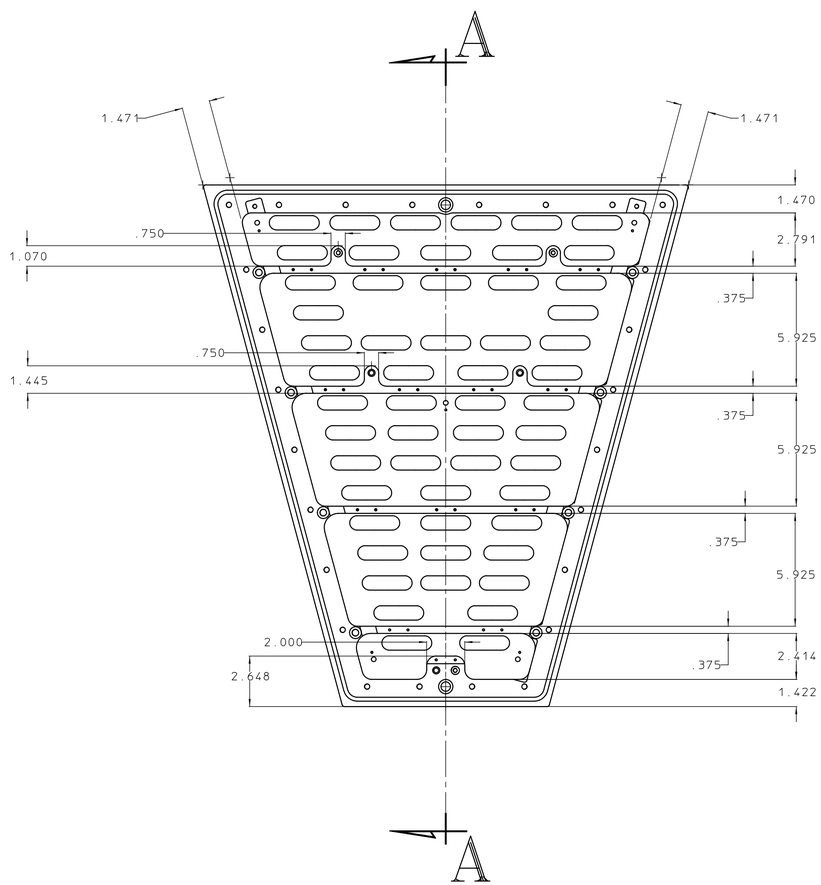

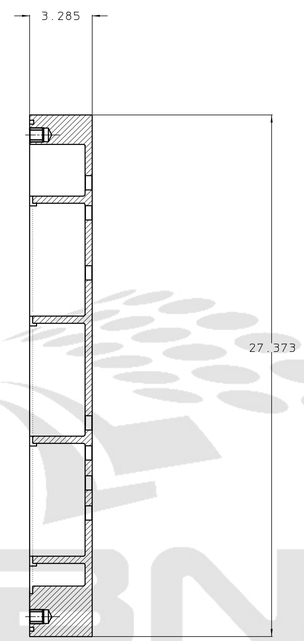

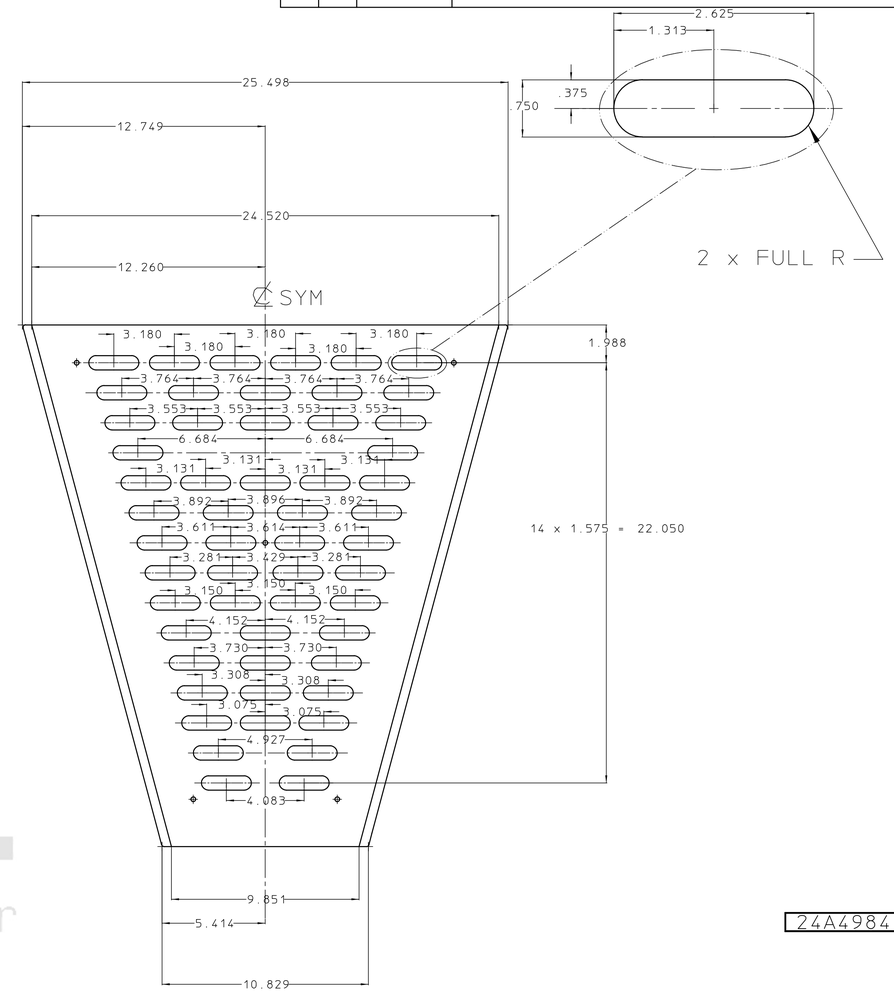

24A4984

NOTES

1. FOR MANUFACTURING DRAWING SEE DWG # 24A3685B INNER SECTOR STRONGBACK
2. PART IS MADE FROM ALUMINUM, 6061-T651
3. WEIGHT OF PART IS APPROXIMATELY 70 lbs.

REV	DWG	CHK	ZONE	DATE	CHANGES

UNLESS OTHERWISE SPECIFIED

TOLERANCES			
.X ± -	FRAC. ± -		
.XX ± -	ANGLES ± -		
.XXX ± -	FINISH - √		

THREADS ARE CLASS 2
CHAMFER ENDS OF ALL SCREW THREADS 30°.
CUT 1.5 PITCH THRD RELIEF WITH ROUND NOSE TOOL ON MACHINE CUT THREADS.
BREAK EDGES .016 MAX. ON MACHINED WORK.
REMOVE BURRS WELD SPLATTER & LOOSE SCALE
REFERENCES: ANSI Y14.5 & B46.1.

SHOP ORDERS

ACCT. NO.	SERIAL NO.	
DATE ISSD	DATE REQD.	NO. REQD.
DELIVER TO		
SURFACE TREATMENT -		
IDENT. METH. -		
DWG. BY J. BOEHM	DATE 94-03-03	
CHK. BY J. BERCOVITZ	DATE 94-03-03	

LAWRENCE BERKELEY LABORATORY
UNIVERSITY OF CALIFORNIA-BERKELEY

RHIC-STAR-TPC

SECTOR STRONGBACK

INNER SECTOR OUTLINE DIMENSIONS

PATENT CLEAR	DWG. TYPE	SHOWN ON	SCALE 1:4	DO NOT SCALE PRINTS
	DIAGRAM	-		
MICROFILMED	DESIGN ACCT. NO. 8052-24	CATEGORY CODE SR-02-04	DWG. NO. 24A4984	SIZE / REV. -

LBNL Document Control Center

Officially Released to the LBNL Document Control Center
Released: DCC Auth Key: LS1CTSSGPN

Downloaded by: James H Thomas at August 12, 2014 12:52:58

AUTO GENERATED PDF – Dec 13 2005 22:58:52 PST