Officially Released to the LBNL Document Control Center
Released: September 27th, 1993 DCC Auth Key: RXC0JUNCOV
Downloaded by: James H Thomas at August 12, 2014 12:52:49

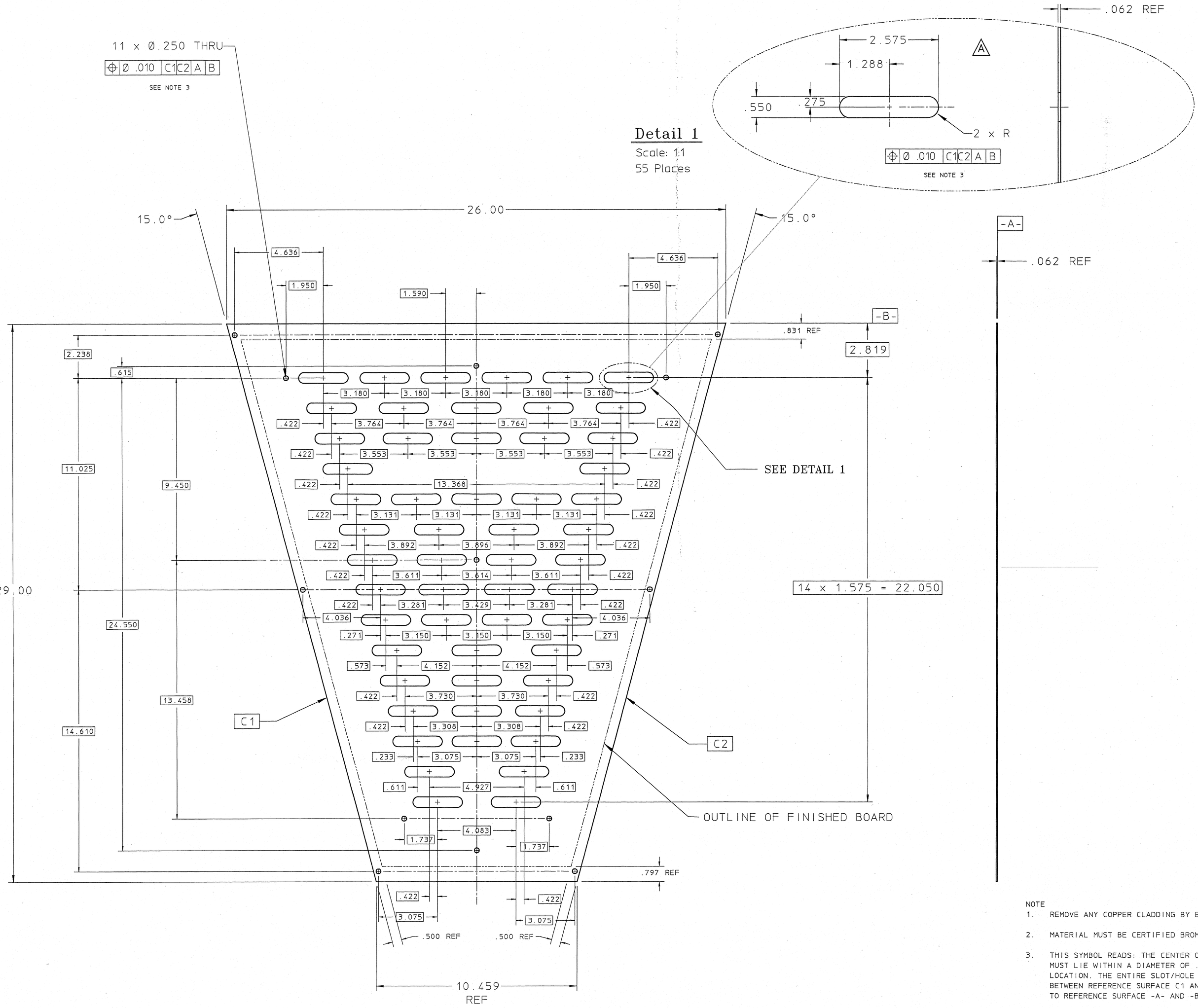

NOTE

1. REMOVE ANY COPPER CLADDING BY ETCHING FROM BOTH SIDES OF BOARD.
2. MATERIAL MUST BE CERTIFIED BROMIDE FREE
3. THIS SYMBOL READS: THE CENTER OF THE FEATURE DESCRIBED MUST LIE WITHIN A DIAMETER OF .010 AROUND THE THEORETICAL LOCATION. THE ENTIRE SLOT/HOLE PATTERN MUST BE SYMMETRICAL BETWEEN REFERENCE SURFACE C1 AND C2, AND BE AT RIGHT ANGLES TO REFERENCE SURFACE -A- AND -B-.

24A3736A

ITEM	REQ	PART NUMBER	DESCRIPTION
		.064" LAMINATE, HIGH PRESSURE GLASS/EPOXY, per FED SPECs	
		LP509a TYPE 4 GRADE G-10 (DO NOT USE FR-4) see NOTE 2	
1	X	Part Number	Material/Parts Call-Out

STAR	WBS # 0.00.0	Production Approval: / Cognizant Engineer: J. BERCOVITZ	STAR DRAWING NUMBER TPC385-E-1	REV. A	RHIC DRAWING NUMBER XXXXXXXXXX - REV.

REV.	DWN.	CHK.	ZONE	DATE	CHANGES
A	JB		95	0330	CUTOUT WAS 2.625 x.75, CHANGED LOGO

UNLESS OTHERWISE SPECIFIED
ALL DIMENSIONS ARE INCHES / CENTIMETERS
TOLERANCES: .X/.X = ±.06/.15; .XX/.X = ±0.02/0.05; 0.XXX/.XX=±.005/.01; ANGLES ±5°; FINISH 125/32
SAWED, FLAMECUT, SHEARED OR STOCK FINISH ±1/C
ALL SCREW THREADS ARE ISO METRIC CLASS 6
BREAK EDGES .020/.05 MAX ON MACHINE WORK
REFERENCE - ANSI Y14.5 & B46.1

SHOP ORDERS
ACCT. NO.: SER. NO.:
DATE REQ'D: DATE REQ'D: NO. REQ'D:
DELIVER TO:
SURFACE TREATMENT: RINSE W/ALCOHOL
IDENTIFICATION METHOD: TAG & BAG
DRWN BY: J. BOEHM DATE: 93/09/27
CHECK BY: DATE:

LAWRENCE BERKELEY LABORATORY
UNIVERSITY OF CALIFORNIA - BERKELEY
RHIC-STAR-TPC
INNER SECTOR
PAD PLANE INSULATOR BOARD

PATENT CLEAR	DRAWING TYPE	SHOWN ON	SCALE: FULL	DO NOT SCALE PRINTS
	DETAIL	00X0000		
MICROFILMED: MA	DESIGN ACCOUNT: 8052-24	CATEGORY CODE: SR-02-04	LBL DRAWING NUMBER: 24A3736	REV. A