REQD	ITEM	PART NO.	DESCRIPTION
1	1		PLATE, .25" THICK, ALUMINUM 5052-H34
2	2		PLATE, .50" THICK, ALUMINUM 5052-H34

NOTES, UNLESS OTHERWISE SPECIFIED:

1. DIMENSIONING & TOLERANCING PER ANSI Y14.5M. UNITS ARE IN INCHES.
2. REMOVE ALL BURRS & BREAK ALL SHARP EDGES .010"-.015" CHAMFER OR RADIUS.
3. ALL WELD SYMBOLS PER ANSI/AWS A2.4, ALL WELDS PER ANSI/AWS D1.2.
4. ENDS OF TUBE (ITEM #1) TO BE MACHINED WITH A SINGLE POINT TOOL.
5. APPROXIMATE WEIGHT: 85 lbs.

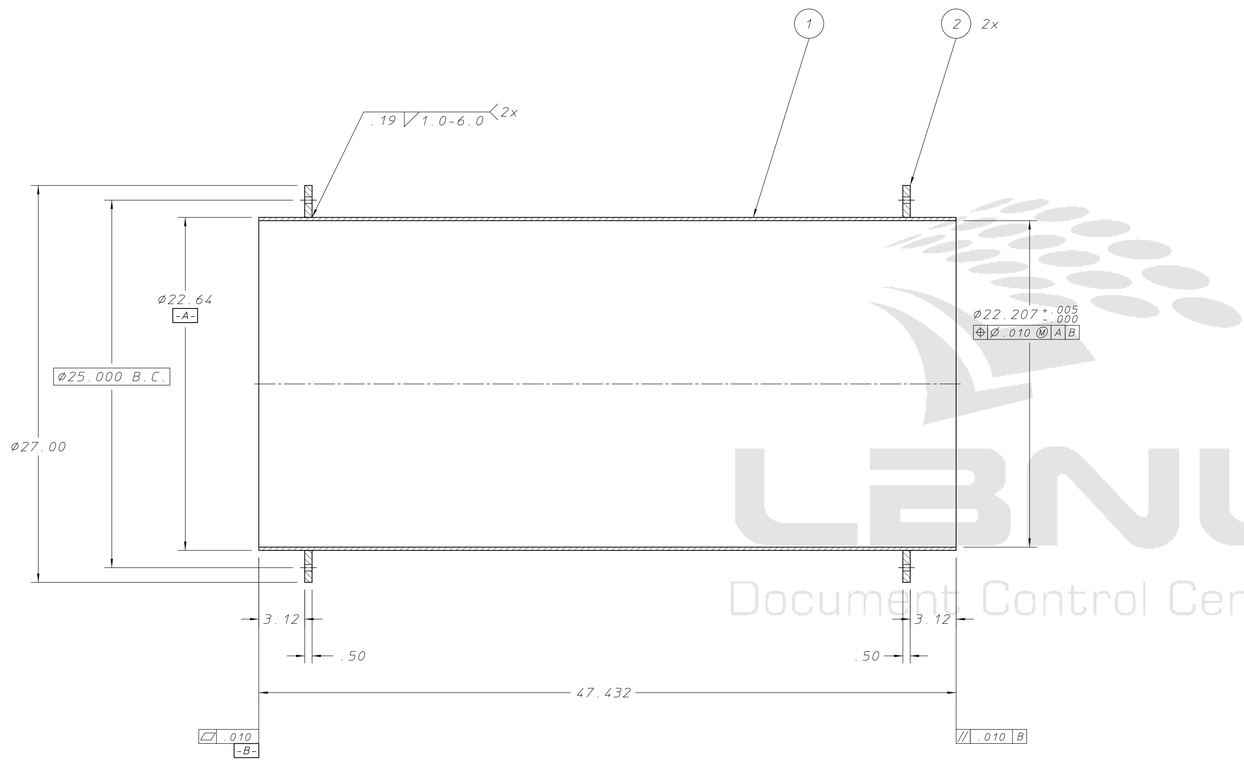

SECTION A – A

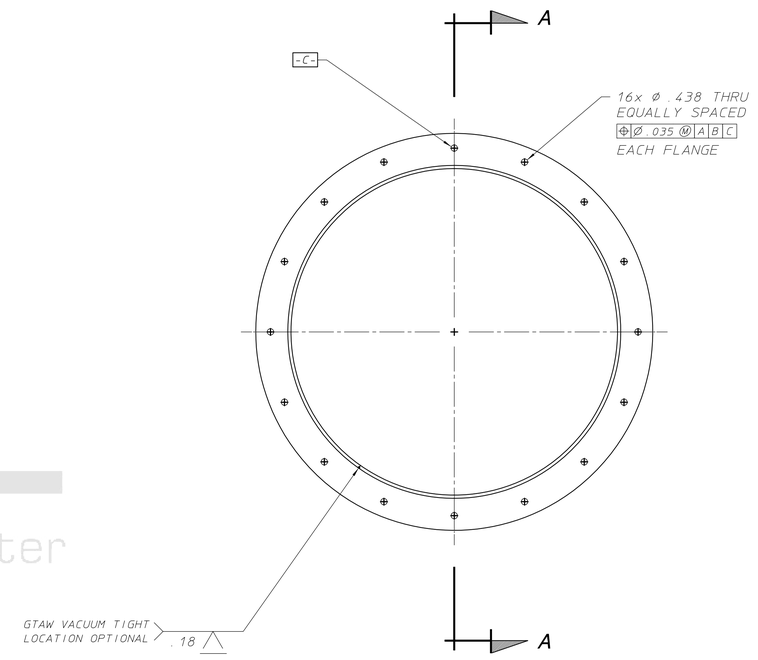

24A0716

REV	DWG	CHK	ZONE	DATE	CHANGES

UNLESS OTHERWISE SPECIFIED
TOLERANCES: .X ± .1 FRAC. ± ; .XX ± .03 ANGLES ± 1° ; .XXX ± .015 FINISH 125/
THREADS ARE CLASS 2.
CHAMFER ENDS OF ALL SCREW THREADS 30°.
CUT 1.5 PITCH THRD RELIEF WITH ROUND NOSE TOOL ON MACHINE CUT THREADS.
BREAK EDGES .016 MAX. ON MACHINED WORK
REMOVE BURRS WELD SPLATTER & LOOSE SCALE
REFERENCES: ANSI Y14.5 & B46.1.

SHOP ORDERS
ACCT. NO. | SERIAL NO.
DATE ISSD. | DATE REQD. | NO. REQD.
DELIVER TO
SURFACE TREATMENT
IDENT. METH.
DWG. BY: STEVE HERNANDEZ DATE 4-21-93
CHK. BY: DEREK SHUMAN DATE 4-23-93

LAWRENCE BERKELEY LABORATORY
UNIVERSITY OF CALIFORNIA-BERKELEY
RHIC - STAR - TIME PROJECTION CHAMBER
OUTER FIELD CAGE (OFC) - GAS PROTOTYPE
GAS CONTAINMENT VESSEL, OUTER

PATENT CLEAR	DWG. TYPE	SHOWN ON	SCALE HALF	DO NOT SCALE PRINTS
	C-DETAIL	24A0706		
MICROFILMED	DESIGN ACCT. NO.	CATEGORY CODE	DWG. NO. 24A0716	SIZE / REV.
		SR0201		

LBNL Document Control Center

Officially Released to the LBNL Document Control Center
Released: April 23rd, 1993 DCC Auth Key: 70IPMP4FCE

AUTO GENERATED PDF – Dec 13 2005 23:03:15 PST

Downloaded by: James H Thomas at August 12, 2014 12:52:45