REQ	ITEM	PART NUMBER	DESCRIPTION

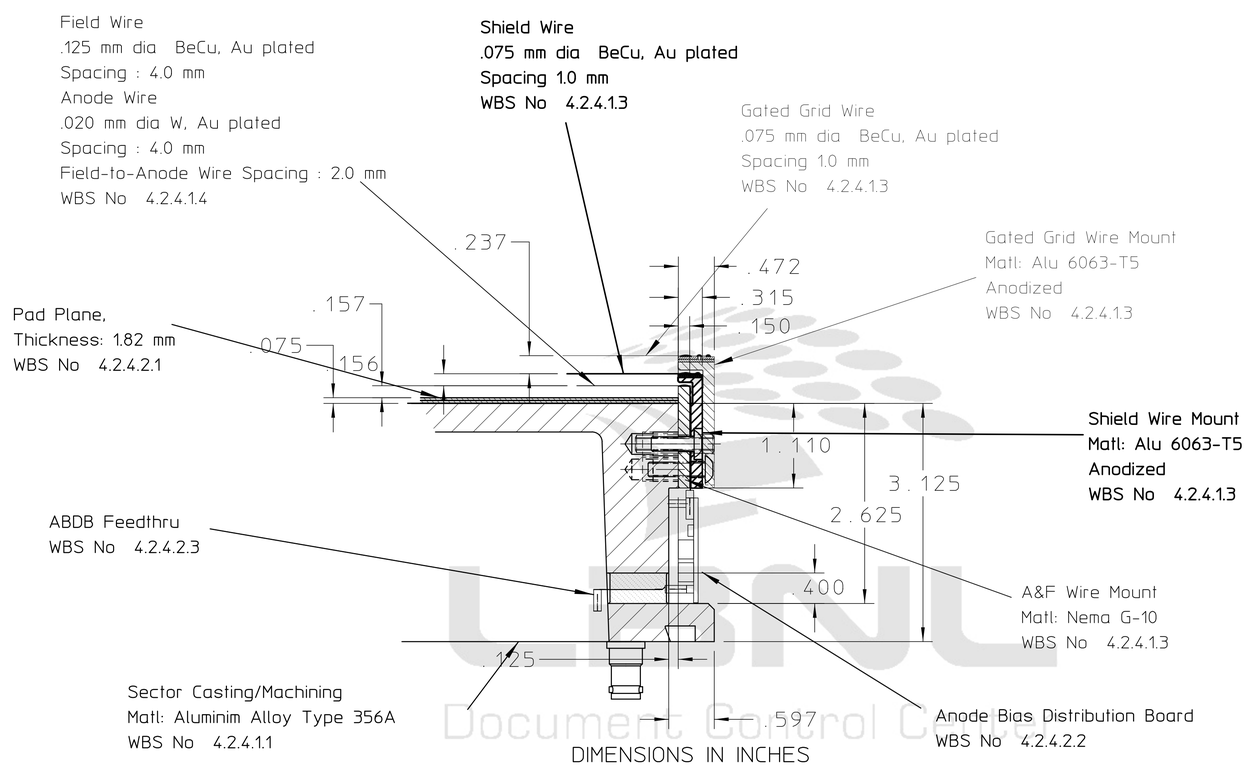

LBNL
Document Control Center

STAR Outer Sector Wire Mount

Assembled View

J.B. 930106

24A0304

REV	DWG	CHK	ZONE	DATE	CHANGES

UNLESS OTHERWISE SPECIFIED

TOLERANCES		
.X ± .1		
.XX ± .02	ANGLES ± 1°	
.XXX ± .005	FINISH 125	

THREADS ARE CLASS 2
CHAMFER ENDS OF ALL SCREW THREADS 30°.
CUT 1.5 PITCH THRD RELIEF WITH ROUND NOSE TOOL ON MACHINE CUT THREADS.
BREAK EDGES .016 MAX. ON MACHINED WORK.
REMOVE BURRS WELD SPLATTER & LOOSE SCALE
REFERENCES: ANSI Y14.5 & B46.1.

SHOP ORDERS

ACCT. NO.		SERIAL NO.	
DATE ISSD.	DATE REQD.	NO. REQD.	
DELIVER TO			
SURFACE TREATMENT			
IDENT. METH.			
DWG BY J BOEHM		DATE 93-02-04	
CHK BY J BERCOVITZ		DATE 93-02-04	

LAWRENCE BERKELEY LABORATORY
UNIVERSITY OF CALIFORNIA-BERKELEY

RHIC-STAR-TPC

OUTER SECTOR

WIRE MOUNT CONCEPT, ASSEMBLED VIEW

PATENT CLEAR	DWG. TYPE	SHOWN ON	SCALE	DO NOT SCALE PRINTS
	CONCEPT	00X0000	NONE	
MICROFILMED	DESIGN ACCT. NO.	CATEGORY CODE	DWG. NO.	SIZE / REV.
	8052-24	SR-04-02	24A0304	

AUTO GENERATED PDF – Dec 13 2005 22:53:33 PST

Officially Released to the LBNL Document Control Center
Released: DCC Auth Key: 10ZM29WL1F

Downloaded by: James H Thomas at August 12, 2014 12:52:40