REQD	ITEM	PART NO.	DESCRIPTION
			PIPE, 20" OD SCHEDULE 40 (.593" WALL), PVC

NOTES, UNLESS OTHERWISE SPECIFIED:

1. DIMENSIONING & TOLERANCING PER ANSI Y14.5M. UNITS ARE IN INCHES.
2. REMOVE ALL BURRS & BREAK ALL SHARP EDGES .005"-.010" CHAMFER OR RADIUS.
3. ENDS OF TUBE TO BE MACHINED WITH A SINGLE POINT TOOL.

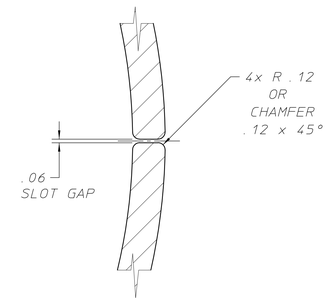

SLOT DETAIL
(FULL LENGTH OF TUBE)

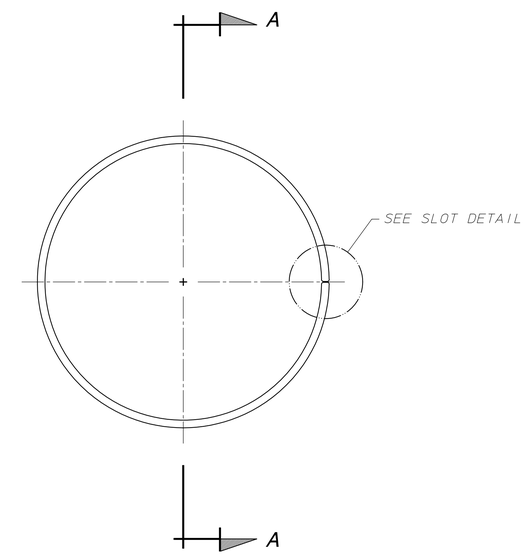

24A0726

REV	DWG	CHK	ZONE	DATE	CHANGES

UNLESS OTHERWISE SPECIFIED
TOLERANCES: .X ± .1 FRAC. ± ; .XX ± .03 ANGLES ± 1° ; .XXX ± .015 FINISH 125√
THREADS ARE CLASS 2
CHAMFER ENDS OF ALL SCREW THREADS 30°
CUT 1.5 PITCH THRD RELIEF WITH ROUND NOSE TOOL ON MACHINE CUT THREADS.
BREAK EDGES .016 MAX. ON MACHINED WORK
REMOVE BURRS WELD SPLATTER & LOOSE SCALE
REFERENCES: ANSI Y14.5 & B46.1.

SHOP ORDERS
ACCT. NO. | SERIAL NO.
DATE ISSD. | DATE REQD. | NO. REQD.
DELIVER TO
SURFACE TREATMENT
IDENT. METH.
DWG. BY: STEVE HERNANDEZ DATE 4-26-93
CHK. BY: DEREK SHUMAN DATE 4-30-93

LAWRENCE BERKELEY LABORATORY
UNIVERSITY OF CALIFORNIA-BERKELEY
RHIC - STAR - TIME PROJECTION CHAMBER
OUTER FIELD CAGE (OFC) - GAS PROTOTYPE
GAS CONTAINMENT VESSEL, INNER

PATENT CLEAR	DWG. TYPE	SHOWN ON	SCALE	DO NOT SCALE PRINTS
	C-DETAIL	24A0706	HALF	
MICROFILMED	DESIGN ACCT. NO.	CATEGORY CODE	DWG. NO.	SIZE / REV.
		SR0201	24A0726	

LBNL Document Control Center

Officially Released to the LBNL Document Control Center
Released: April 30th, 1993 DCC Auth Key: PKBBZSCOPK

Downloaded by: James H Thomas at August 12, 2014 12:52:45

AUTO GENERATED PDF – Dec 13 2005 23:03:25 PST