POWER

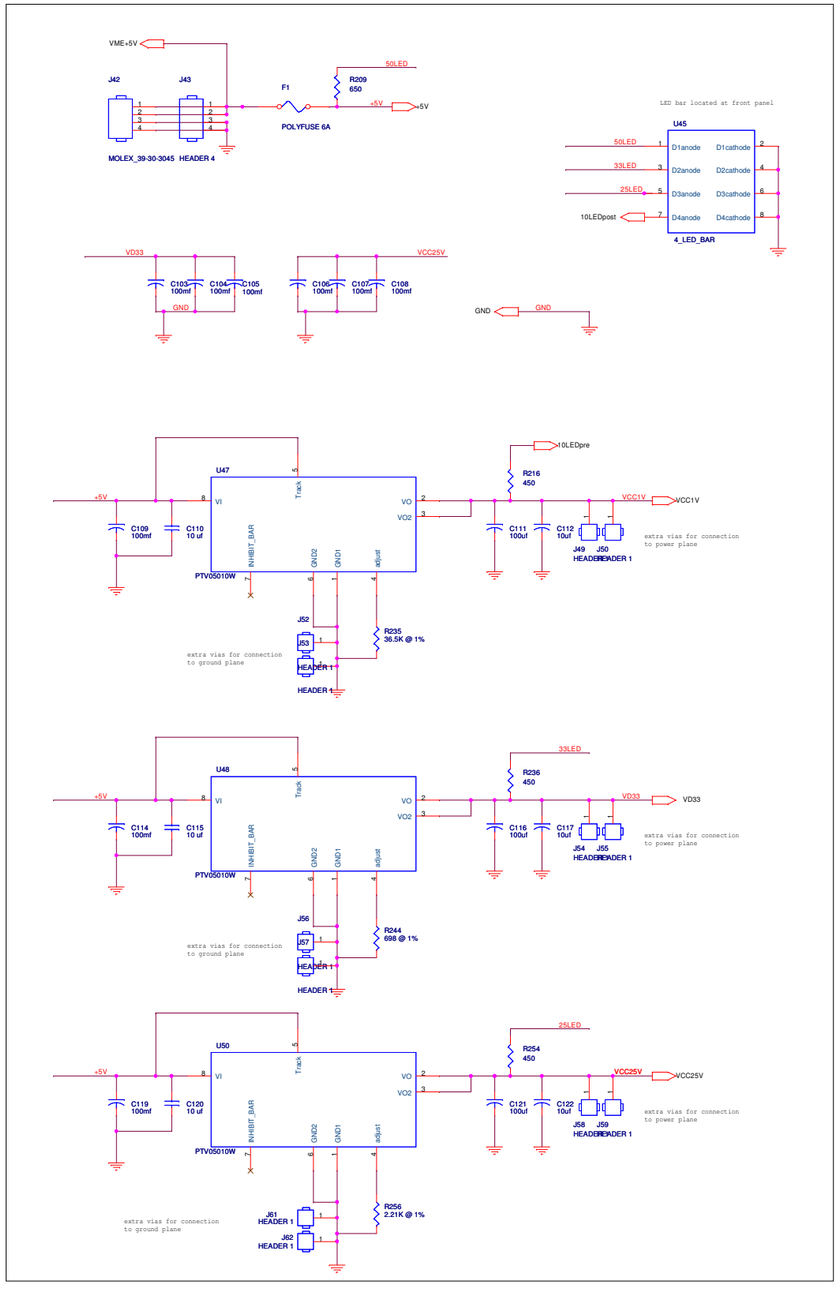

DS617 (Xilinx Flash XL) header

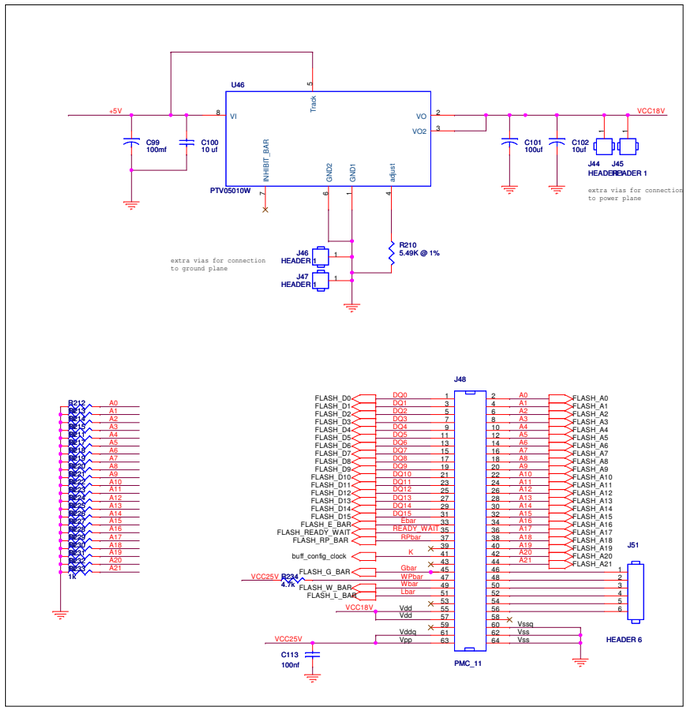

JTAG interface

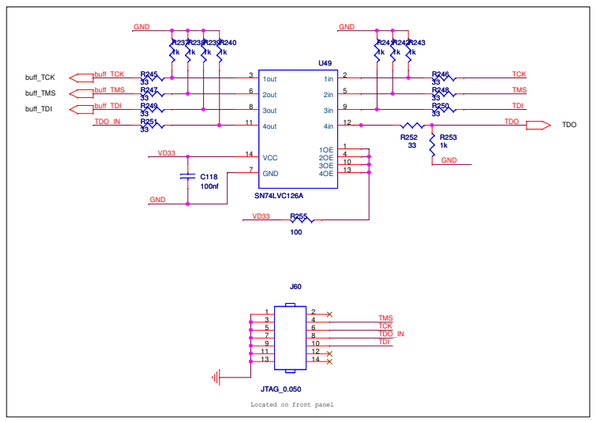

Title	PXL V-6 MB Power and configuration	
Size D	Document Number <Doc>	Rev A
Date: Wednesday, June 08, 2011	Sheet 8 of 9	