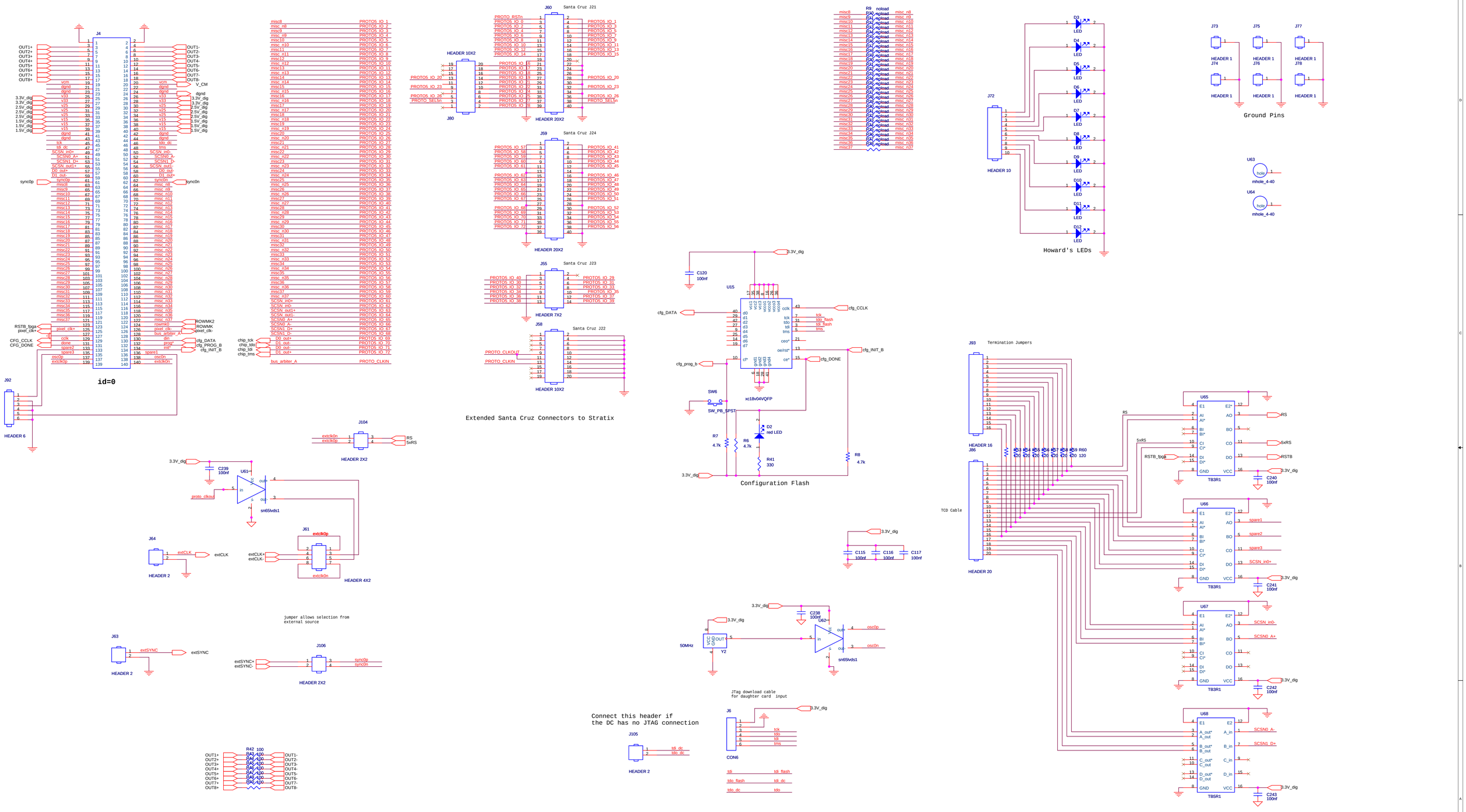

Title	Mimostar2_motherboard_ver2_no_rg	
Size D	Document Number <Doc>	Rev <RevCode>
Date: Thursday, June 15, 2006	Sheet 1 of 1	

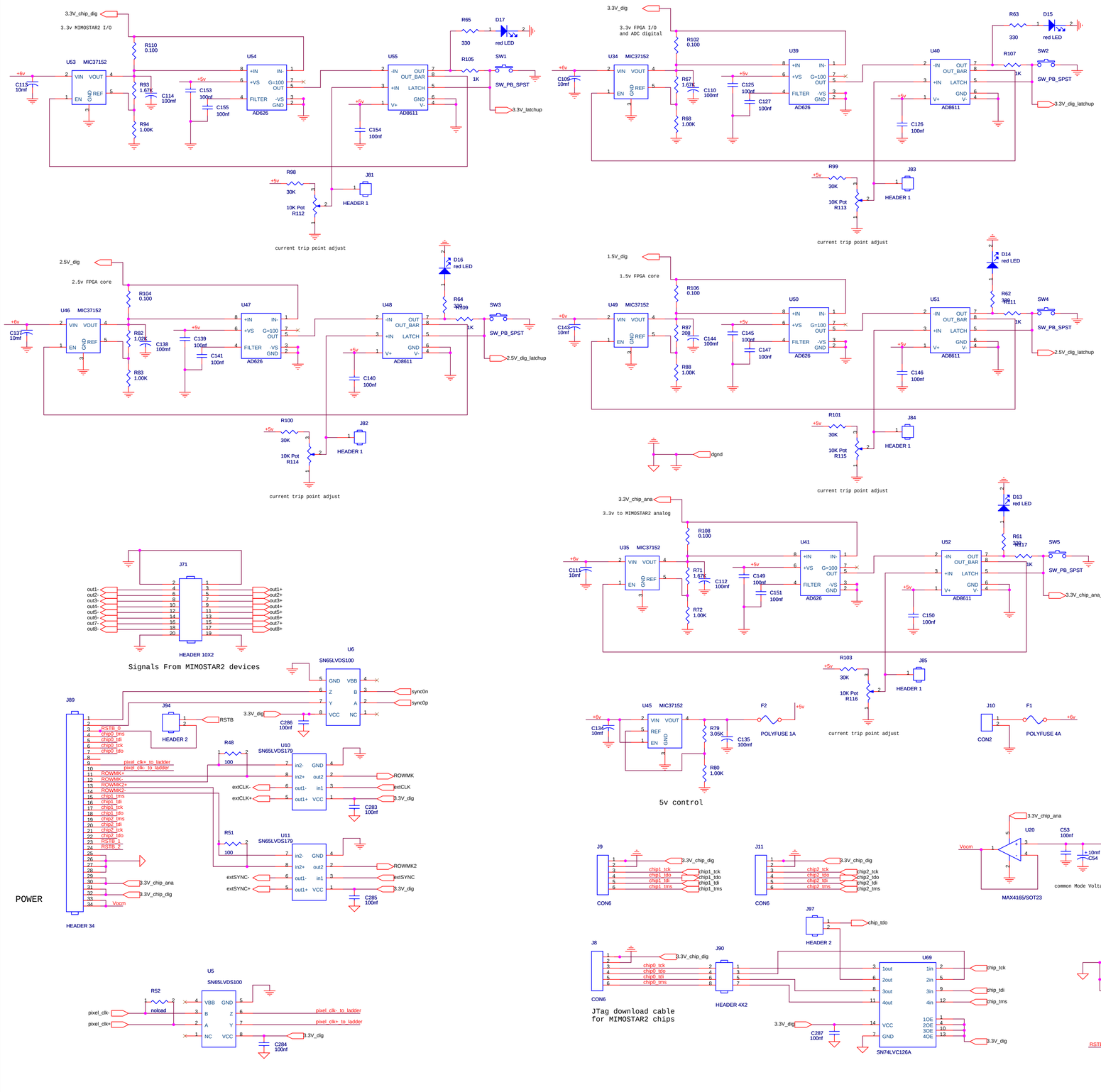

PARTS IN BOX ARE ON HEADER CARD

Signals to Motherboard

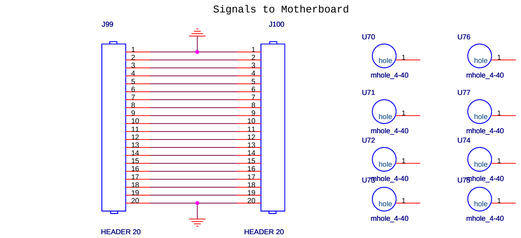

Signals To / From MIMOSTAR2 devices

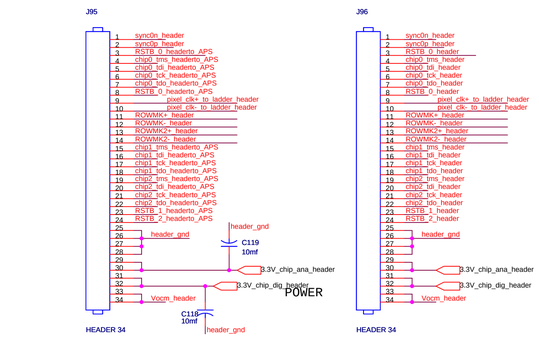

Signals To / From MIMOSTAR2 devices

Signals to / from Motherboard

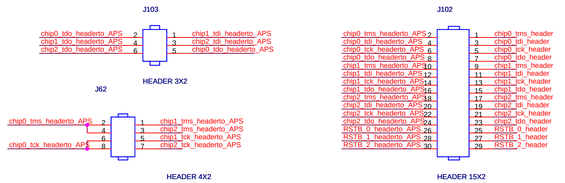

Title <Title>		
Size D	Document Number <Doc>	Rev <RevCode>
Date: Thursday, June 15, 2006	Sheet 1 of 1	