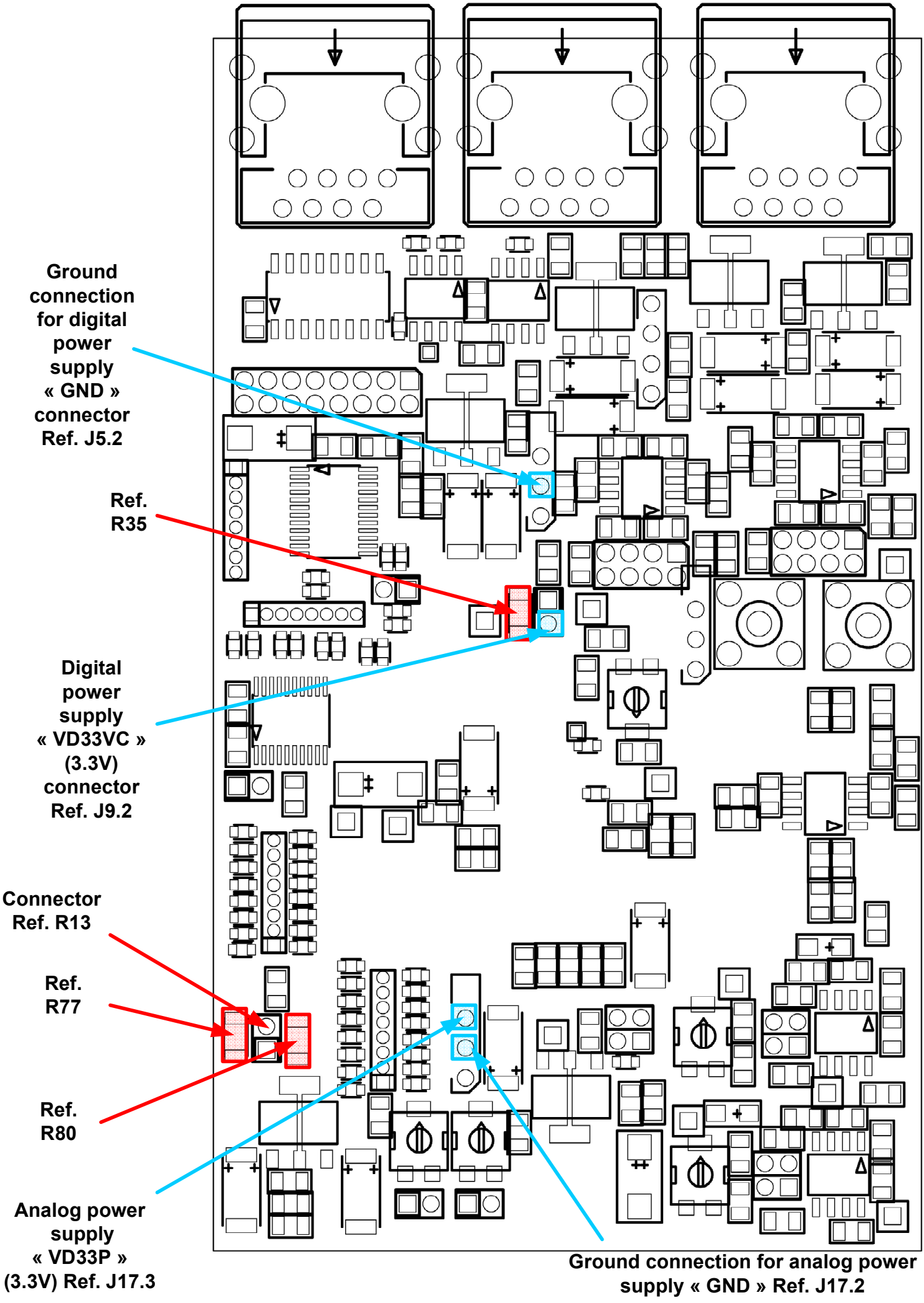
Ground connection for digital power supply « GND » connector Ref. J5.2
Ref. R35
Digital power supply « VD33VC » (3.3V) connector Ref. J9.2
Connector Ref. R13
Ref. R77
Ref. R80
Analog power supply « VD33P » (3.3V) Ref. J17.3
Ground connection for analog power supply « GND » Ref. J17.2

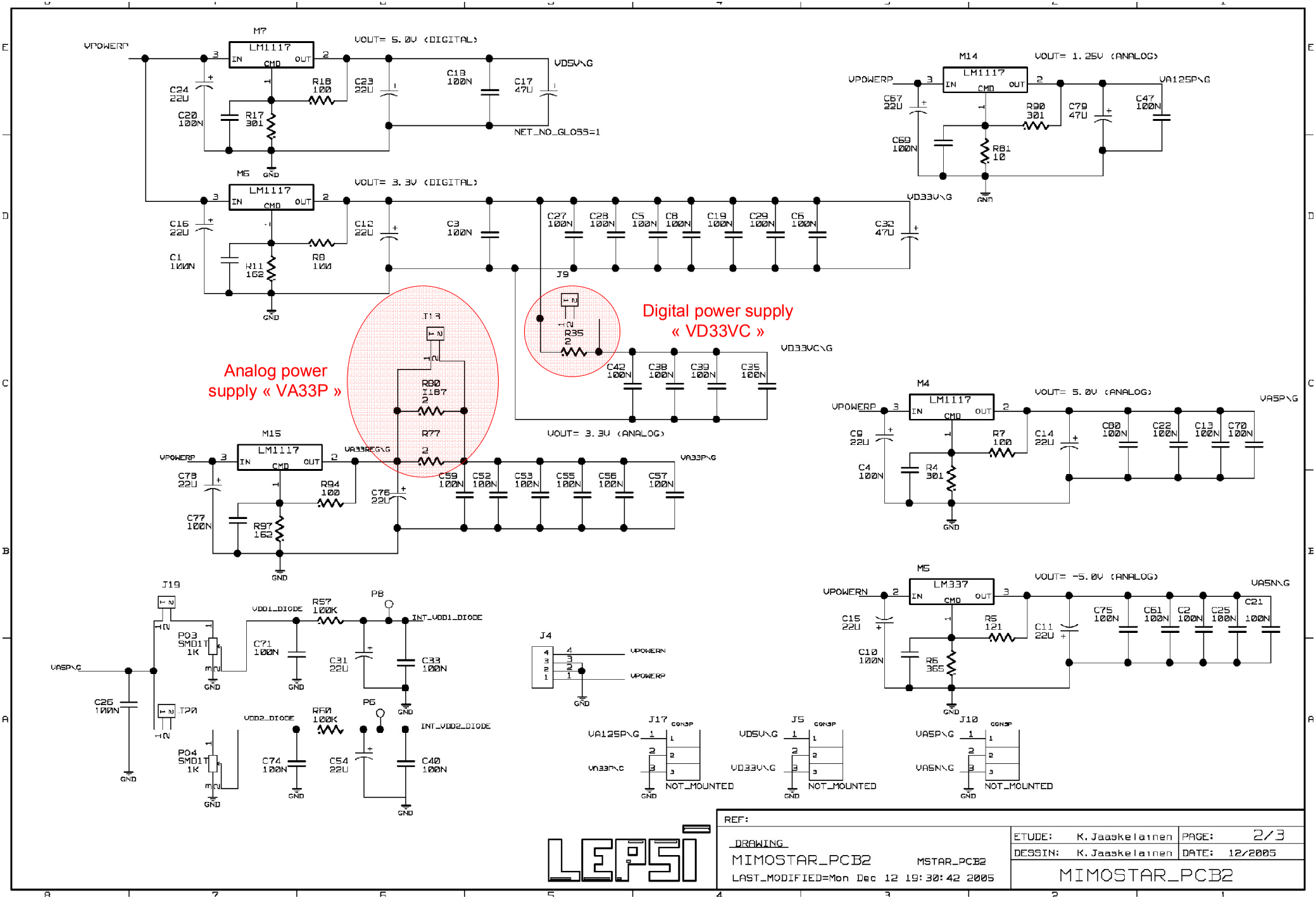

REF:

DRAWING

MIMOSTAR_PCB2 MSTAR_PCB2

LAST_MODIFIED=Mon Dec 12 19:30:42 2005

ETUDE:	K.Jaaskelainen	PAGE:	2/3
DESSIN:	K.Jaaskelainen	DATE:	12/2005

MIMOSTAR_PCB2