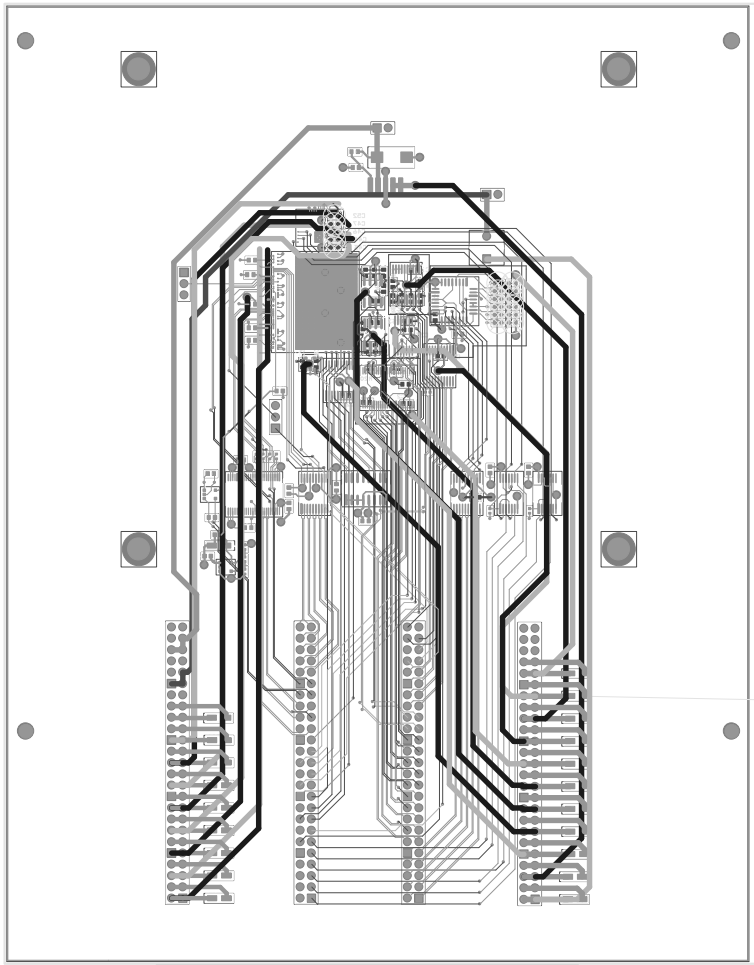

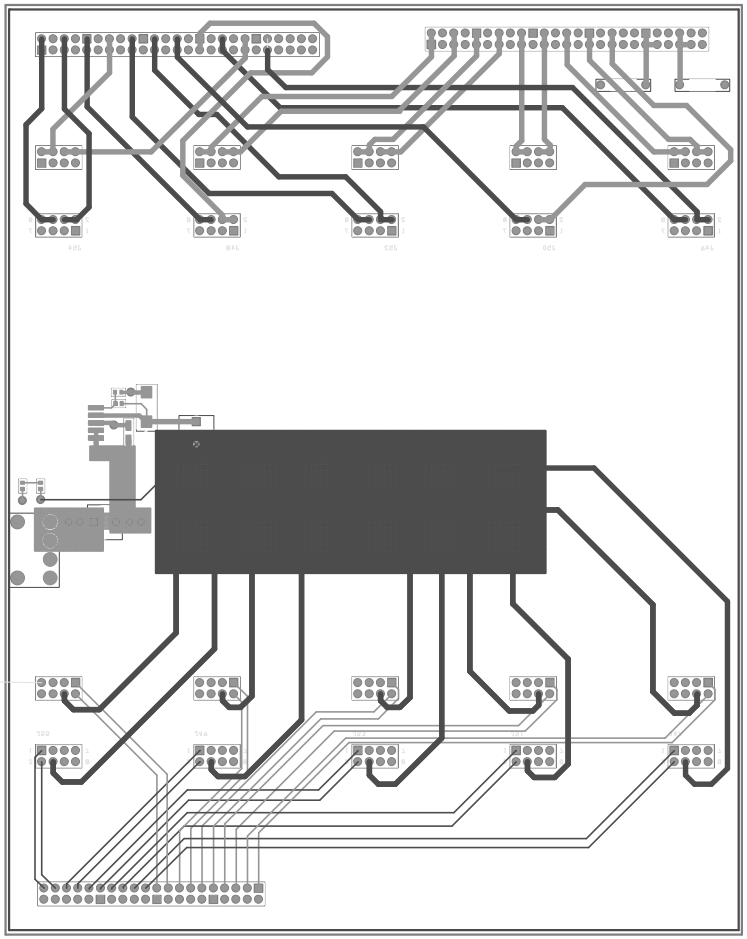

DRILL CHART				
SYM	DIAM	TOL	QTY	NOTE
⊞	0.010		183	
⊕	0.028		67	
×	0.034		10	
+	0.037		510	
◇	0.071		4	
⊠	0.118		2	NON-PLATED
△	0.125		4	NON-PLATED
○	0.285		4	NON-PLATED
TOTAL			784	