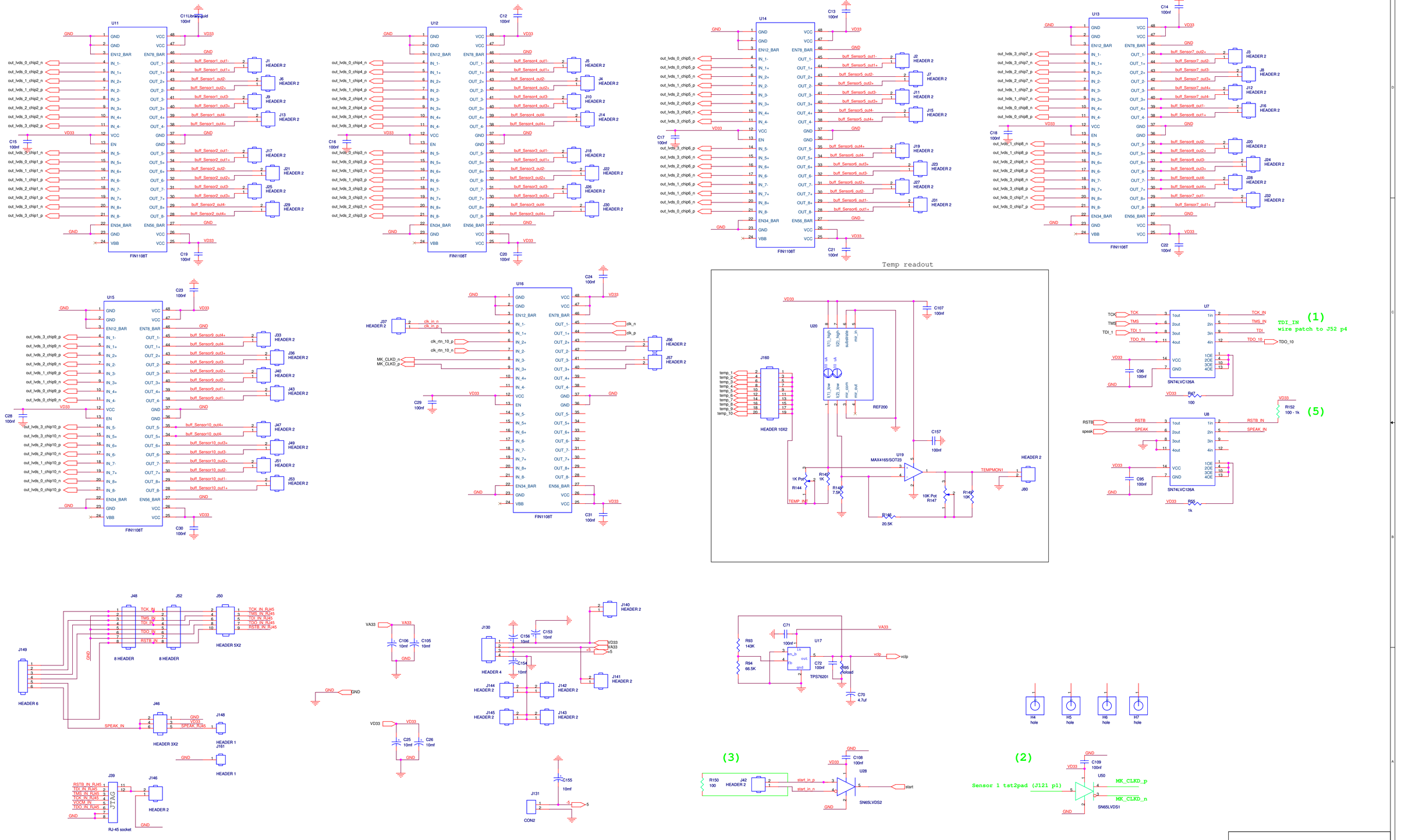

Title	PIXEL LVDS TEST BOARD FR4 CABLE
Size D	Document Number <Doc>
Rev	<RevCode>
Date: Tuesday, July 27, 2010	Sheet 1 of 2

Title	<Title>
Size E	Document Number <Doc>
Rev <Rev Code>	
Date: Tuesday, July 27, 2010	Sheet 1 of 1

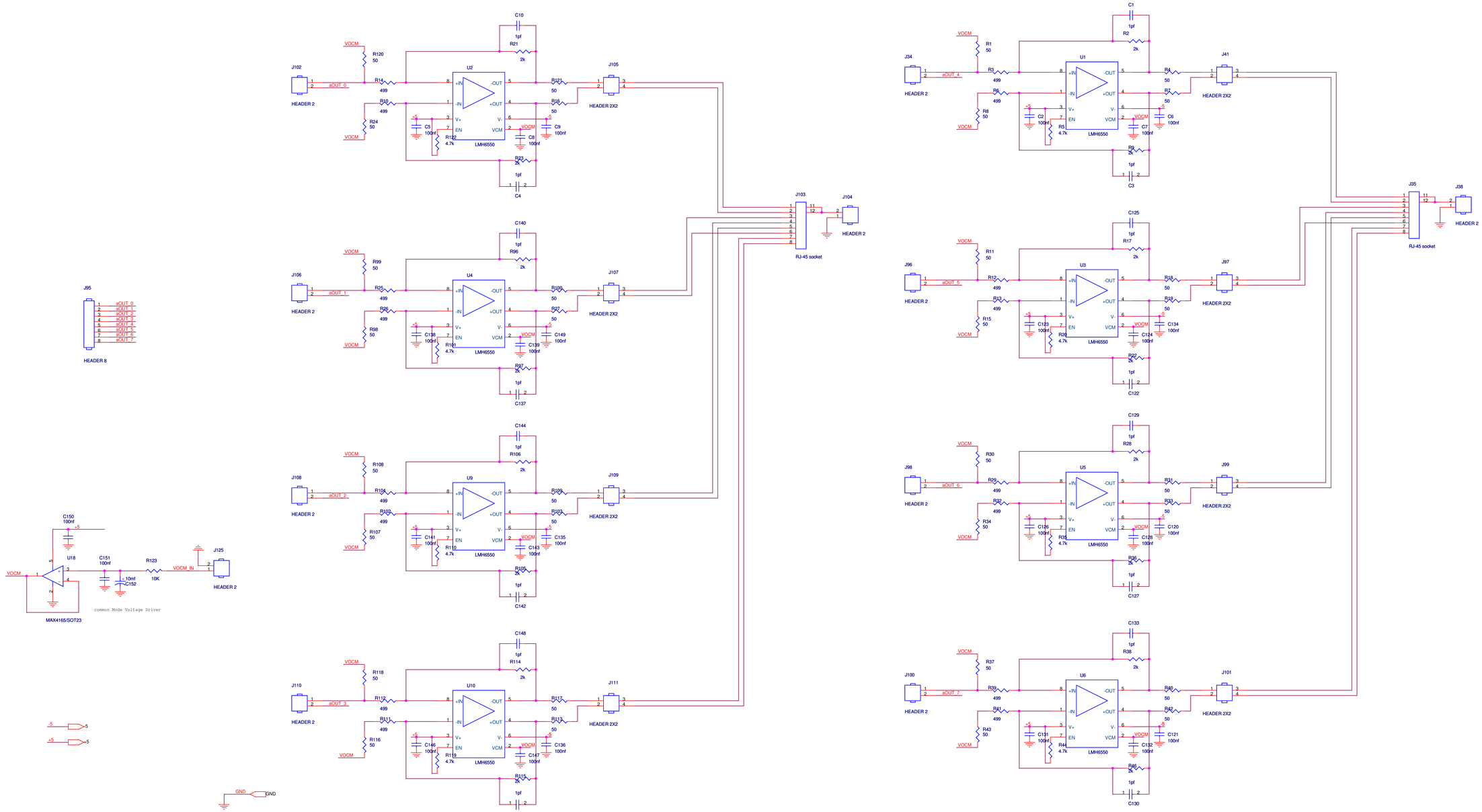

Title	<Title>
Size D	Document Number <Doc>
Rev	<RevCode>
Date: Wednesday, January 20, 2010	Sheet 1 of 1