Pixel Phase-1 RDO - V5 Interface Motherboard

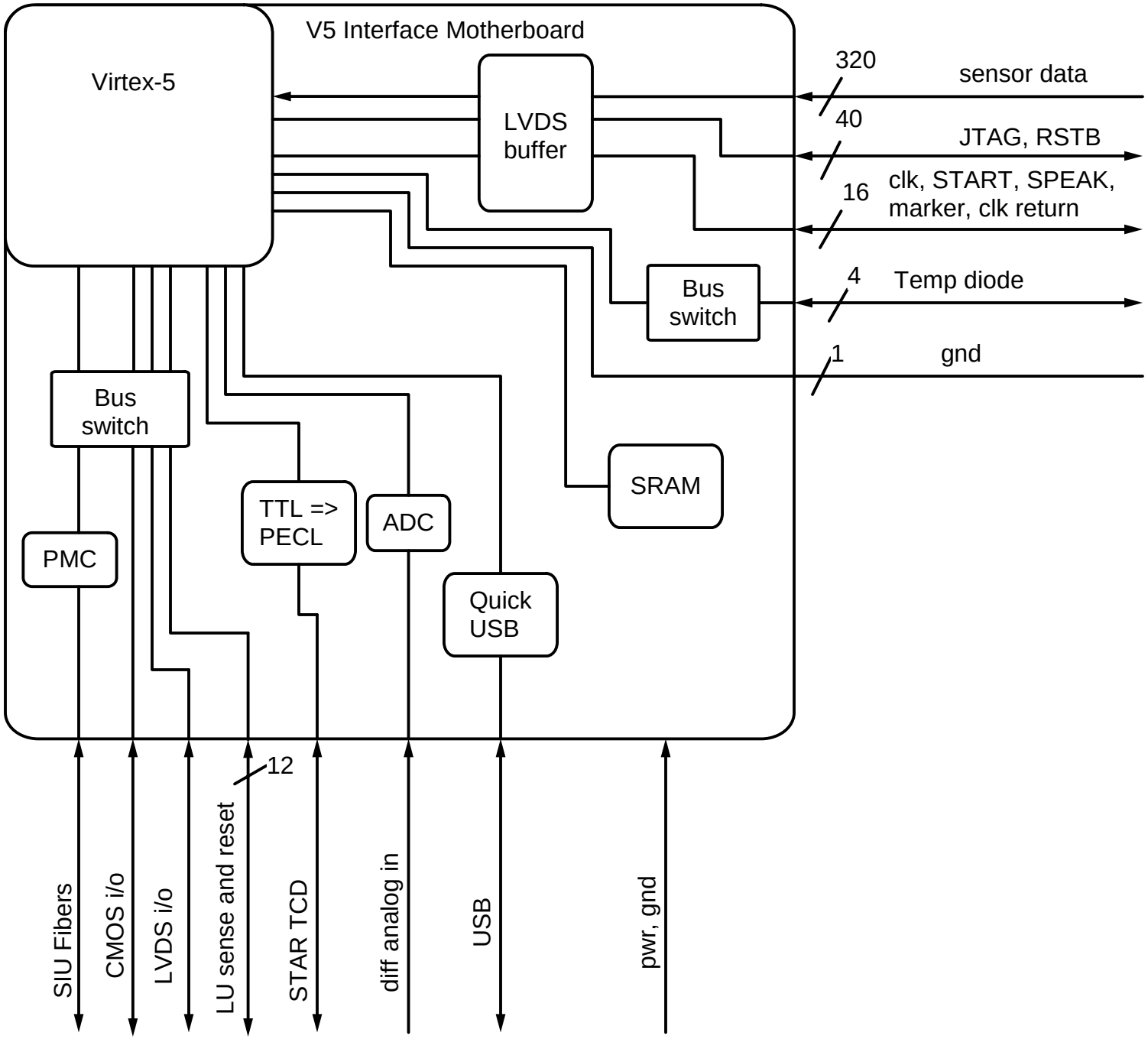

Leo Greiner April 17, 2008