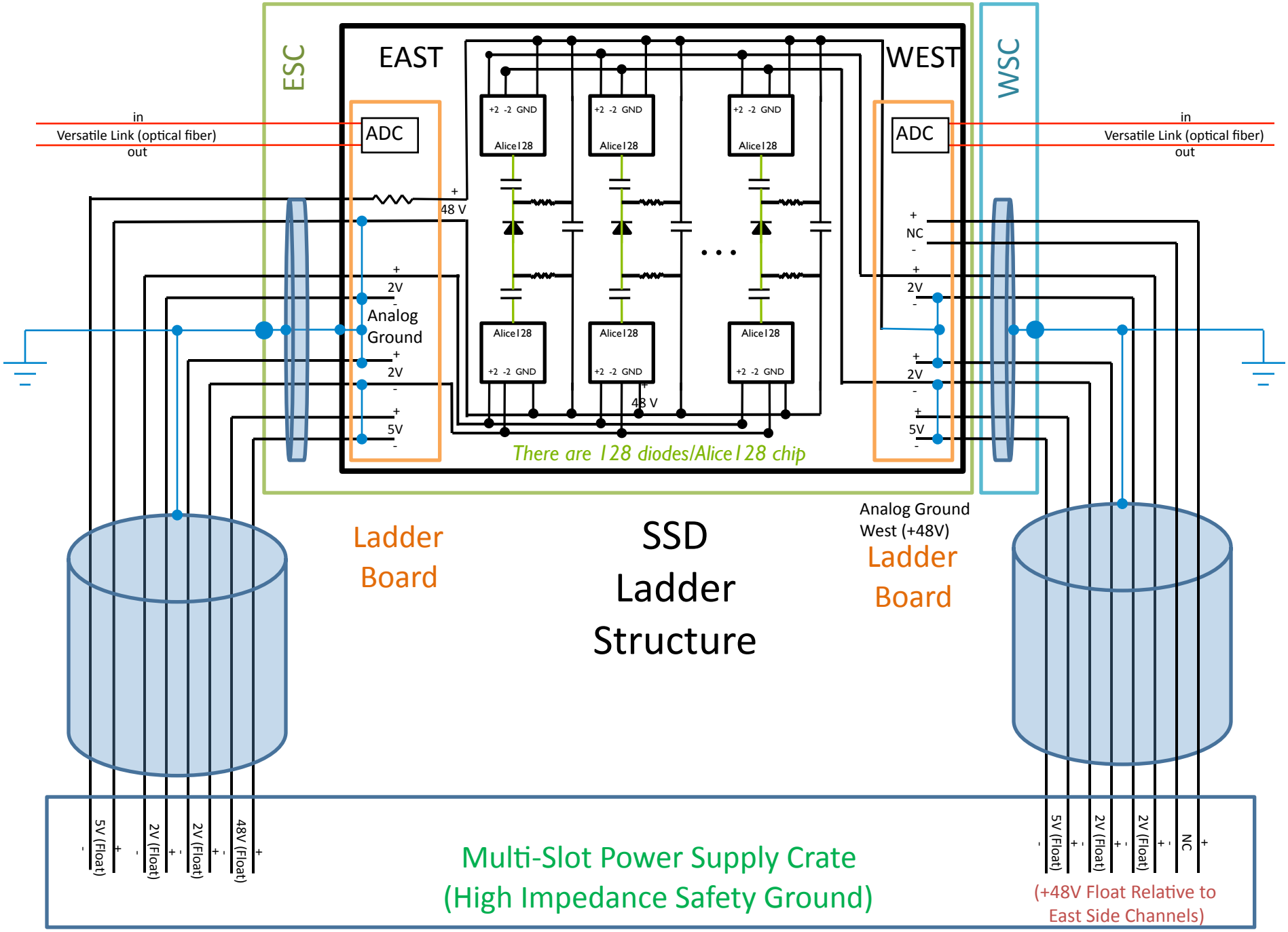
ESC
EAST
WEST
WSC
in
Versatile Link (optical fiber)
out
ADC
ADC
+2 -2 GND
Alice128
48 V
2V
Analog Ground
5V
NC
There are 128 diodes/Alice128 chip
Ladder Board
SSD Ladder Structure
Analog Ground West (+48V)
Ladder Board
5V (Float)
2V (Float)
48V (Float)
NC
Multi-Slot Power Supply Crate
(High Impedance Safety Ground)
(+48V Float Relative to East Side Channels)